Husqvarna

Illustrated Parts List	2007-01
	I0702001

Ride Mower

YTH2042
(917.287520)

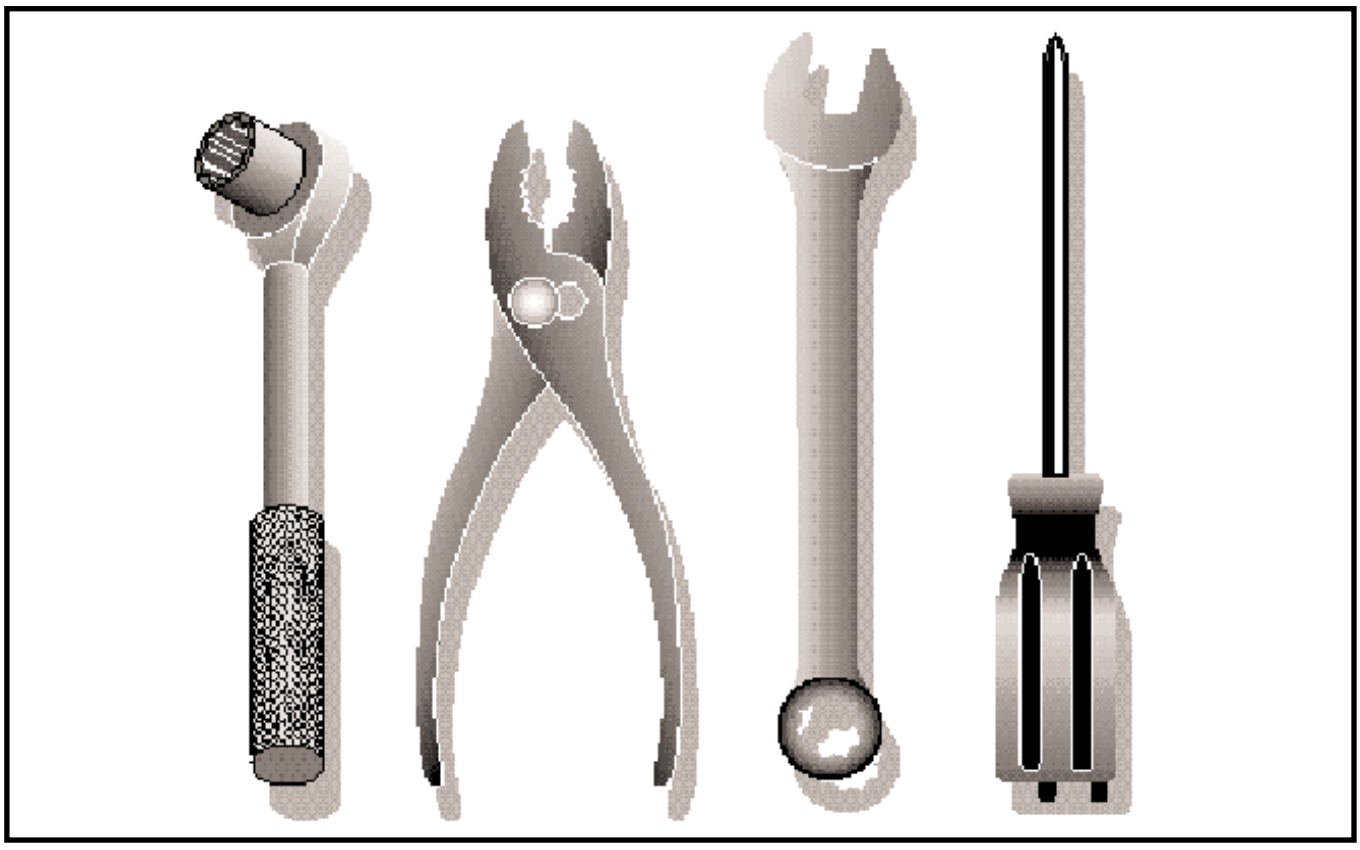

Repair Parts Manual

TRACTOR - MODEL NO. YTH2042

SCHEMATIC

02929-194276_Regulated-Tex

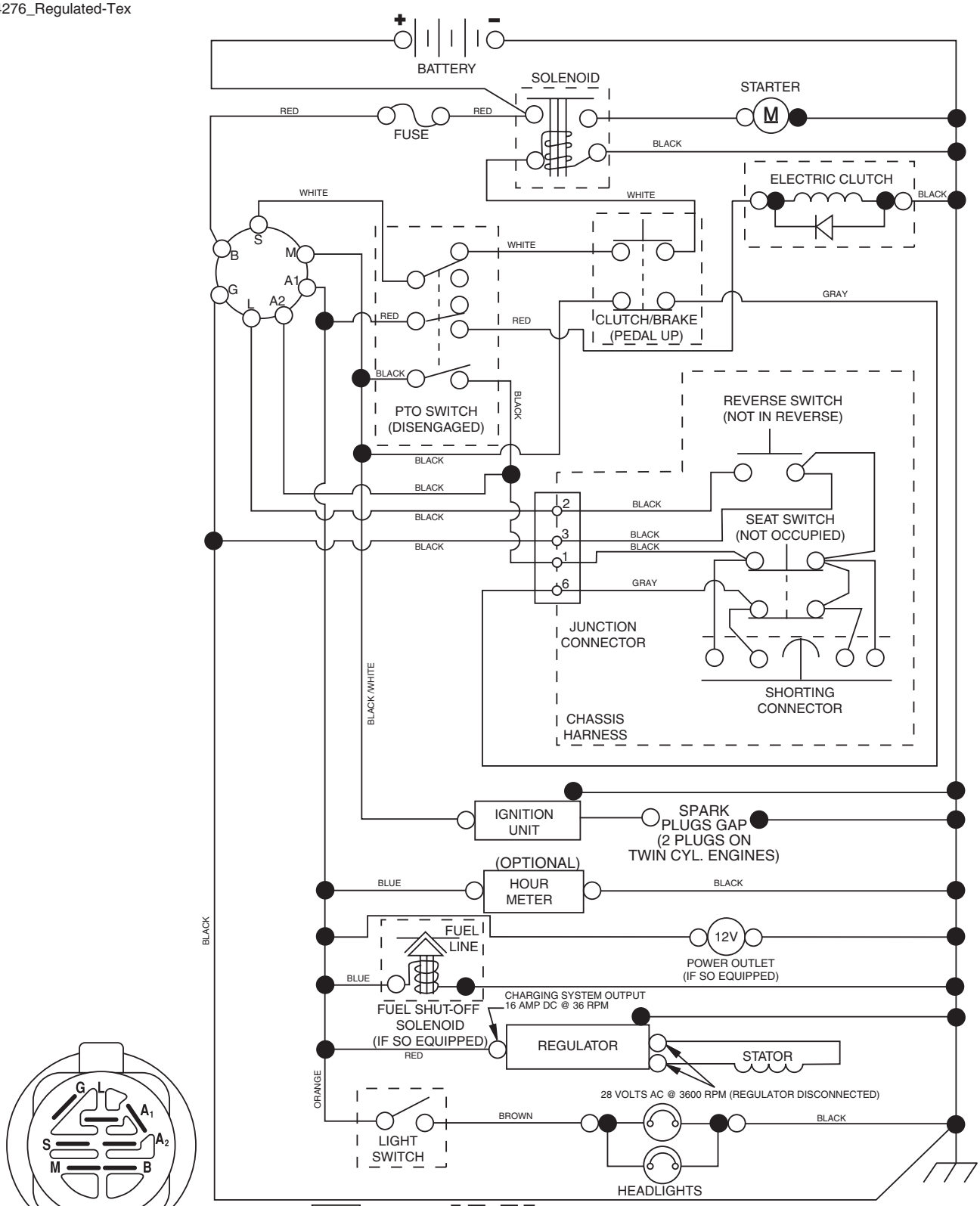

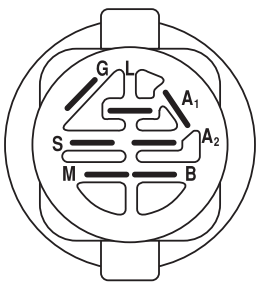

IGNITION SWITCH

POSITION	CIRCUIT "MAKE"
OFF	M+G+A1
RUN/OVERRIDE	B+A1
RUN	B+A1 L+A2
START	B + S + A1

02929

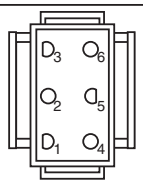

CHASSIS HARNESS CONNECTOR (MATING SIDE)

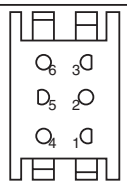

DASH HARNESS CONNECTOR (MATING SIDE)

WIRING INSULATED CLIPS

NOTE: IF WIRING INSULATED CLIPS WERE REMOVED FOR SERVICING OF UNIT, THEY SHOULD BE REPLACED TO PROPERLY SECURE YOUR WIRING.

NON-REMOVABLE CONNECTIONS

REMOVABLE CONNECTIONS

TRACTOR - MODEL NO. YTH2042

DECALS

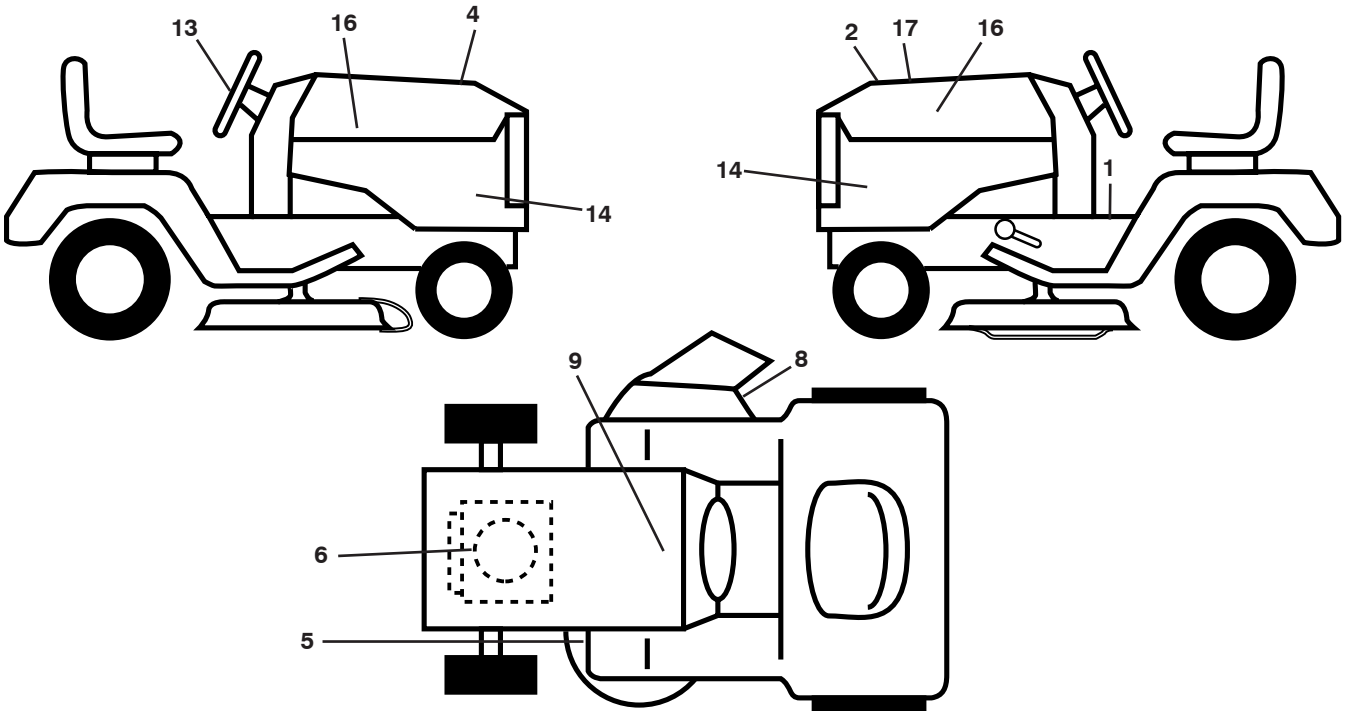

KEY NO.	PART NO.	DESCRIPTION
1	532 40 21-04	Decal, Operator's
2	532 40 21-28	Decal, Hood Insert
4	532 18 09-41	Decal Hood Cust Resp.
5	532 16 03-96	Decal, Mower Sch.
6	532 40 88-35	Decal, Eng. HP
8	532 17 05-63	Decal, Warning
9	532 14 50-05	Decal, Battery Dnge/Poi
13	532 40 44-84	Decal, Steering Whl
14	532 41 06-42	Decal, Panel Side
16	532 40 28-32	Decal, Hood Logo
17	532 41 02-40	Decal, Replacement
- -	532 16 69-60	Decal, Bypass
- -	532 41 08-05	Pad, Footrest, LH
- -	532 41 08-06	Pad, Footrest, RH
- -	532 41 06-58	Manual, Owner's (Eng)
- -	532 41 06-59	Manual, Owner's (Fr)

WHEELS AND TIRES

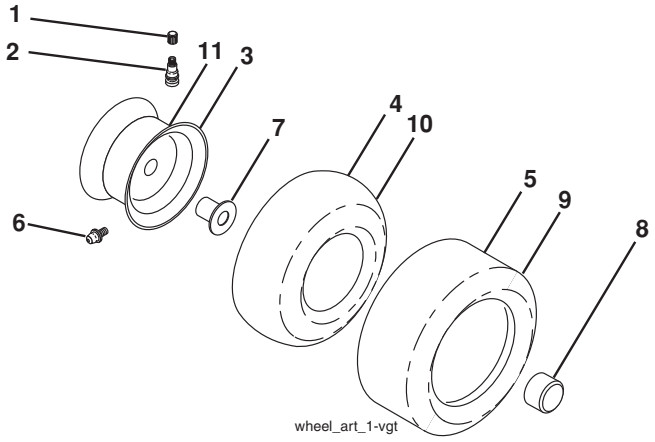

KEY NO.	PART NO.	DESCRIPTION
1	532 05 91-92	Cap, Valve, Tire
2	532 06 51-39	Stem, Valve
3	532 13 83-36	Rim Assembly, Front
4	532 05 99-04	Tube, Front (Service Item Only)
5	532 10 62-22	Tire, Front
6	532 12 49-57	Fitting, Grease (Front Wheel Only)
7	532 12 49-59	Bearing, Flange (Front Wheel Only)
8	532 17 50-39	Cap, Axle (Front Wheel Only)
9	532 10 62-68	Tire, Rear
10	532 12 49-26	Tube, Rear (Service Item Only)
11	532 13 83-37	Rim Assembly, Rear
- -	532 14 43-34	Sealant, Tire (10 oz. Tube)

NOTE: All component dimensions given in U.S. inches
1 inch = 25.4 mm

TRACTOR - MODEL NO. YTH2042

ELECTRICAL

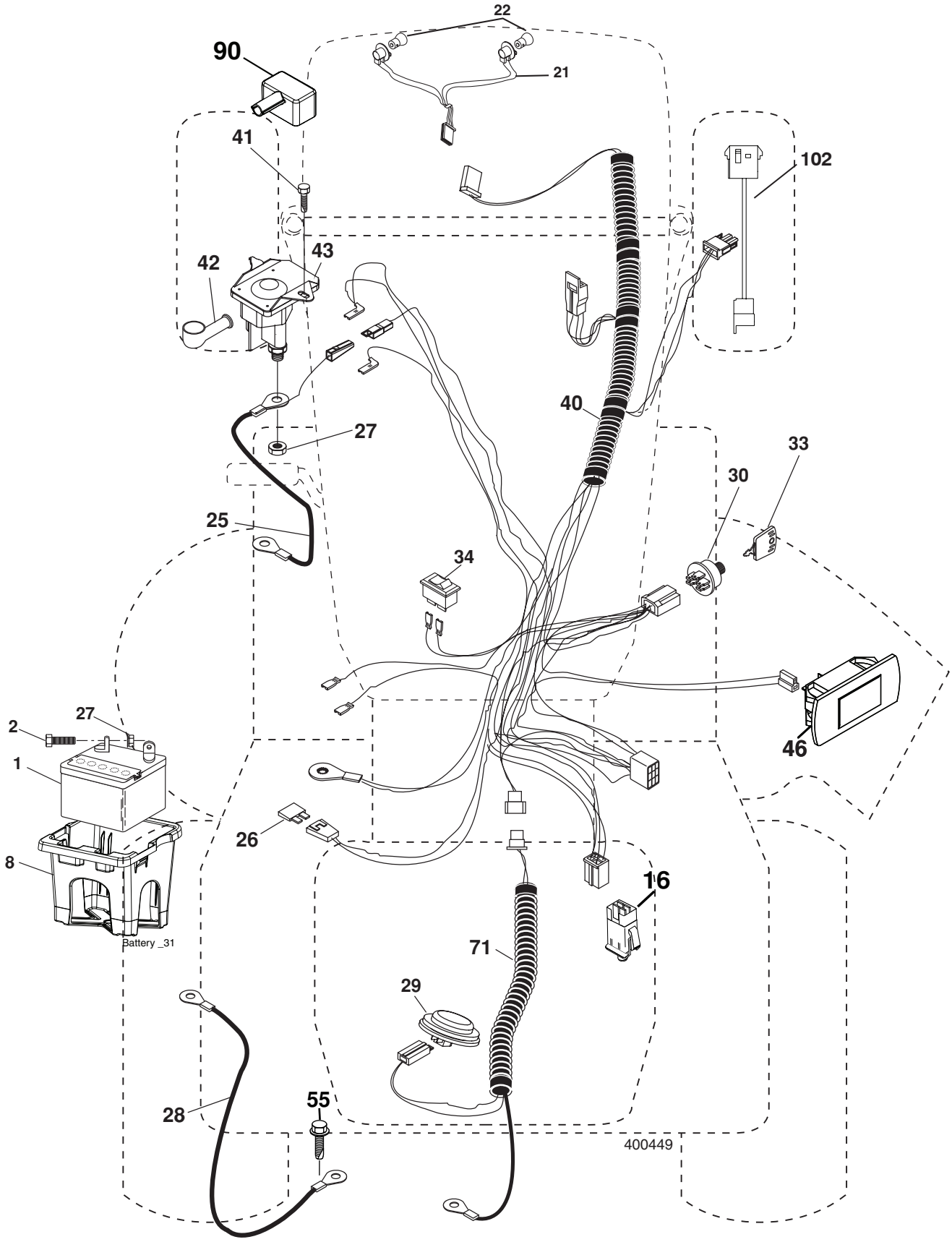

ELECTRICAL

KEY NO.	PART NO.	DESCRIPTION
1	532 16 34-65	Battery
2	874 76 04-12	Bolt Hex Hd 1/4-20 unc x 3/4
8	532 19 32-28	Battery Box
16	532 17 61-38	Switch Interlock
21	532 18 37-59	Harness Socket Light
22	532 00 41-52	Bulb, Light # 1156
25	532 19 88-93	Cable Starter
26	532 17 51-58	Fuse
27	873 51 04-00	Nut Keps Hex 1/4-20 unc
28	532 19 88-85	Cable Ground
29	532 40 15-45	Switch Seat
30	532 19 33-50	Switch Ign
33	532 14 04-01	Key Ign Molded Generic
34	532 11 07-12	Switch Light/Reset
40	532 40 10 98	Harness Ign. Dash
41	817 72 04-08	Screw Thd Cut 1/4-20 x 1/2
42	532 13 15-63	Cover Terminal Red
43	532 19 25-07	Solenoid
46	532 40 17-63	Gauge Hourmeter
50	532 17 46-51	Switch PTO
55	817 06 05-12	Screw Thdrol 5/16-18 x 3/4
71	532 40 04-49	Harness Chassis
90	532 40 07-25	Cover Terminal Battery
102	532 40 44-54	Harness Pigtail

NOTE: All component dimensions given in U.S. inches
1 inch = 25.4 mm

TRACTOR - MODEL NO. YTH2042

CHASSIS

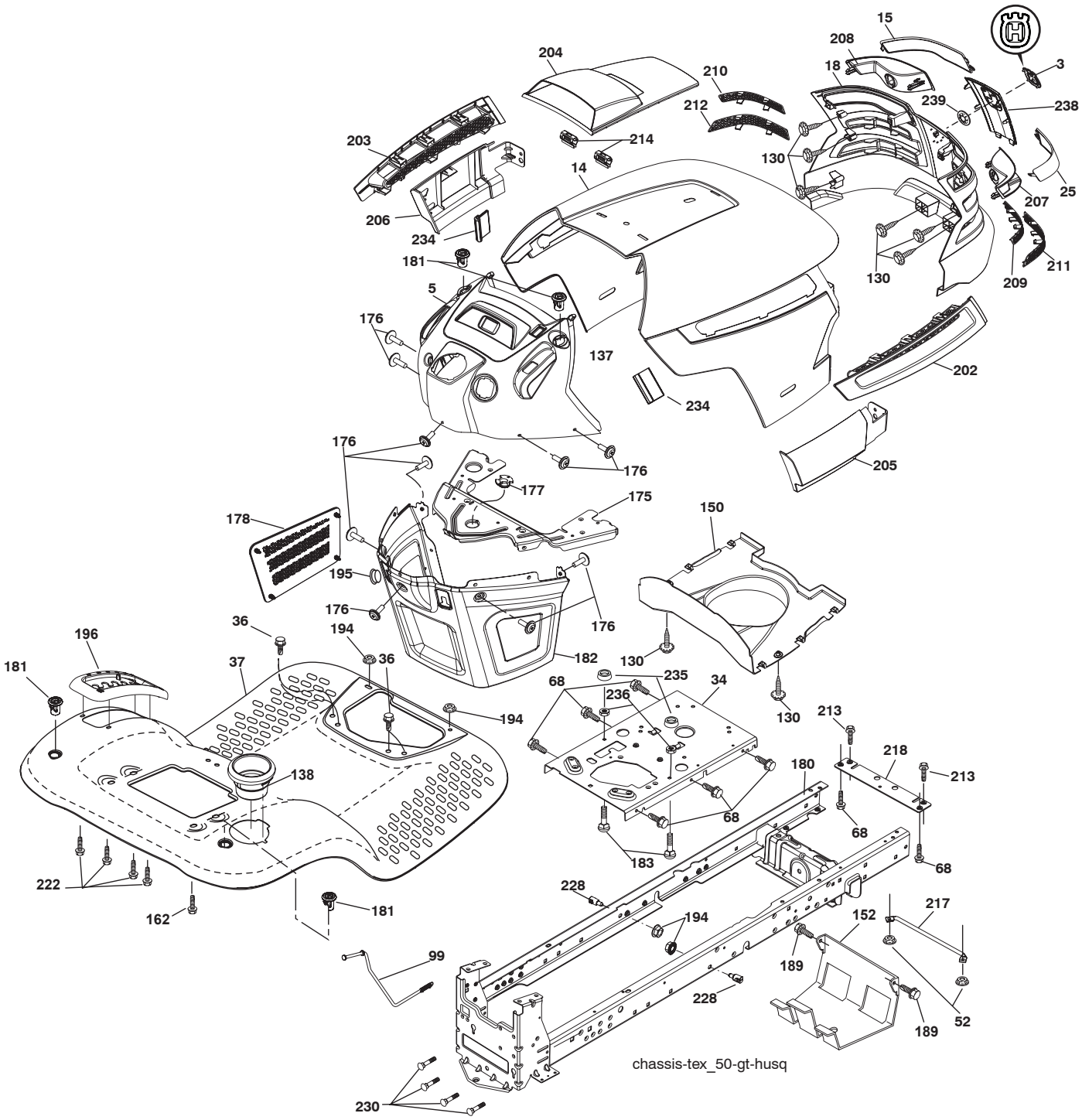

CHASSIS

KEY NO.	PART NO.	DESCRIPTION
3	532 40 50-12	Logo
5	532 40 87-03	Dash
14	532 41 10-46	Hood
15	532 19 89-07	Lens LH
18	532 40 86-07	Grille Asm.
25	532 19 89-06	Lens RH
34	532 19 61-25	Plate Engine
36	817 06 05-12	Screw 5/16-18 x 3/4
37	532 40 47-94	Fender
52	873 68 05-00	Nut Lock 5/16-18
68	817 49 05-08	Screw 5/16-18 x 1/2
99	532 40 59-03	Rod Asm Bypass
130	532 19 16-11	Screw 10 x 3/4 Single Lead-Hex
138	532 40 29-54	Cupholder
150	532 19 85-14	Air Duct
152	532 19 95-35	Shield Browning
162	532 14 24-32	Screw
175	532 19 63-04	Crossmember
176	532 40 07-76	Screw 10-24 x 5/8
177	532 19 52-27	Bushing Steering
178	532 19 97-82	Cargo Net Asm.
180	532 19 54-57	Chassis
181	532 40 30-25	Bushing Mtg. Fender Crgo
182	532 19 47-87	Dash Lower
183	874 78 05-20	Bolt Fin Hex 5/16-18 unc x 1-1/4
189	817 00 05-12	Screw 5/16-18 x 3/4
194	873 90 05-00	Nut Lock Hex Flange 5/16-18
195	532 40 41-37	Plug Hole Dash Lower
196	532 40 28-43	Console Asm. Deck Lift
202	532 40 30-48	Vent Side Hood RH
203	532 40 30-76	Vent Side Hood LH
204	532 19 89-04	Vent Top Hood
205	532 40 17-09	Skirt Hood Side RH
206	532 40 17-11	Skirt Hood Side LH
207	532 19 71-98	Bezel RH
208	532 19 71-99	Bezel LH
209	532 19 91-30	Insert Hex Top RH
210	532 19 91-31	Insert Hex Top Lh
211	532 19 91-32	Insert Hex Bottom RH
212	532 19 91-33	Insert Hex Bottom LH
213	874 76 05-12	Bolt 5/16-18 UNC x 3/4
214	532 19 91-45	Clip Retainer Tinner
217	532 15 65-24	Rod Pivot
218	532 19 63-95	X-Piece Hood Stop
222	532 13 77-29	Screw Thdrol 1/4-20 x 5/8
228	532 19 51-61	Stud Fastner
230	532 17 01-65	Bolt Shoulder 5/16 - 18
234	532 40 47-42	Bumper Hood
235	532 40 61-29	Spacer Fender
236	873 93 05-00	Nut Lock 5/16-18 UNC
238	532 40 86-06	Trim
239	532 11 04-52	Nut Push

NOTE: All component dimensions given in U.S. inches
1 inch = 25.4 mm

TRACTOR - MODEL NO. YTH2042

DRIVE

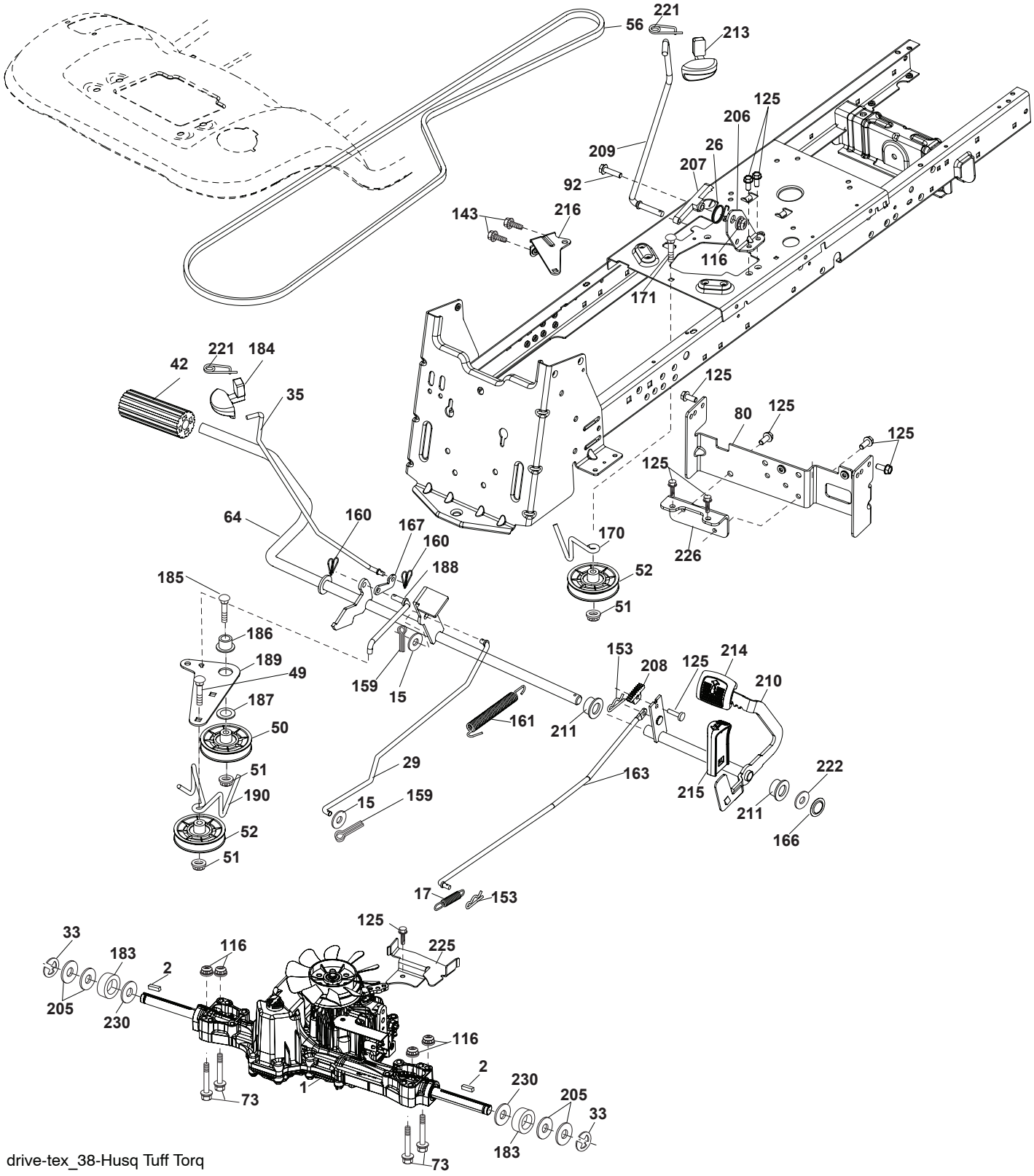

drive-tex_38-Husq Tuff Torq

DRIVE

KEY NO.	PART NO.	DESCRIPTION
1	532 40 53-84	Transaxle, TUFFTORQ K46 (Internal parts not available)
2	532 12 35-83	Key
15	819 13 13-16	Washer 13/32 x 13/16 x 16 Ga.
17	532 40 10-72	Spring, Brake
26	532 19 96-79	Spring Return Cruise
29	532 40 38-06	Rod, Brake
33	812 00 00-01	Ring E
35	532 19 95-91	Rod, Brake, Park
42	532 12 48-72	Cover, Foot Pedal
49	872 11 06-14	Bolt
50	532 19 43-27	Pulley Idler Flat
51	873 90 06-00	Lock Nut 3/8-16
52	532 19 43-26	Idler V-Groove 910" Offset
56	532 13 09-69	V-Belt, Drive
64	532 19 78-65	Shaft Asm. Pedal Brake Control
80	532 41 00-24	Strap Torque
92	874 76 05-20	Bolt Fin Hex 5/16-18 unc x 1.25
116	873 90 05-00	Nut Lock Hex Flange 5/16-18
125	817 00 05-12	Screw 5/16-18 x 3/4
143	817 49 05-08	Screw 5/16-18 x 1/2
153	532 12 47-88	Retainer Spring
159	876 02 04-12	Pin Cotter 1/8 x 3/4
160	532 16 94-84	Retainer Clip
161	532 19 54-03	Spring, Return, Clutch
163	532 40 10-34	Rod Pedal Control
166	532 19 72-90	Nut Push
167	532 40 52-57	Latch Brake Parking
170	532 19 43-22	Keeper Belt Centerspan
171	872 11 06-16	Bolt RDHD SQNK 3/8-16UNC x 2
183	532 13 70-57	Spacer Split
184	532 40 31-18	Handle Parking Brake
185	872 11 06-20	Bolt Rdhd Sqnk 3/8-16 x 2-1/2
186	532 19 43-21	Spacer Retainer
187	819 13 32-10	Washer
188	532 19 43-23	Link Clutch Ground Drive
189	532 19 43-17	Bellcrank Ground Drive
190	532 19 43-18	Keeper Bellcrank Ground Drive
205	532 12 17-48	Washer
206	532 19 78-67	Bracket Mount Latch Cruise
207	532 19 78-68	Latch Control Cruise
208	532 19 78-69	Gear Sector Control Cruise
209	532 19 95-92	Rod Control Cruise
210	532 40 09-80	Rocker Asm. Pedal Control
211	532 12 01-83	Bearing Nylon
213	532 40 31-19	Knob Control Cruise
214	532 40 17-22	Pedal Forward
215	532 40 17-23	Pedal Reverse
216	532 19 61-31	Bracket Pulley Idler
221	532 40 31-87	Retainer Spring Clip Handle
222	879 21 20-10	Washer 21/32 x 1-1/4 x 10 Ga.
225	532 40 33-19	Keeper Belt Trans.
226	532 40 15-64	Bracket Mount Touque
230	532 18 89-67	Washer Hardened

NOTE: All component dimensions given in U.S. inches
1 inch = 25.4 mm

STEERING ASSEMBLY

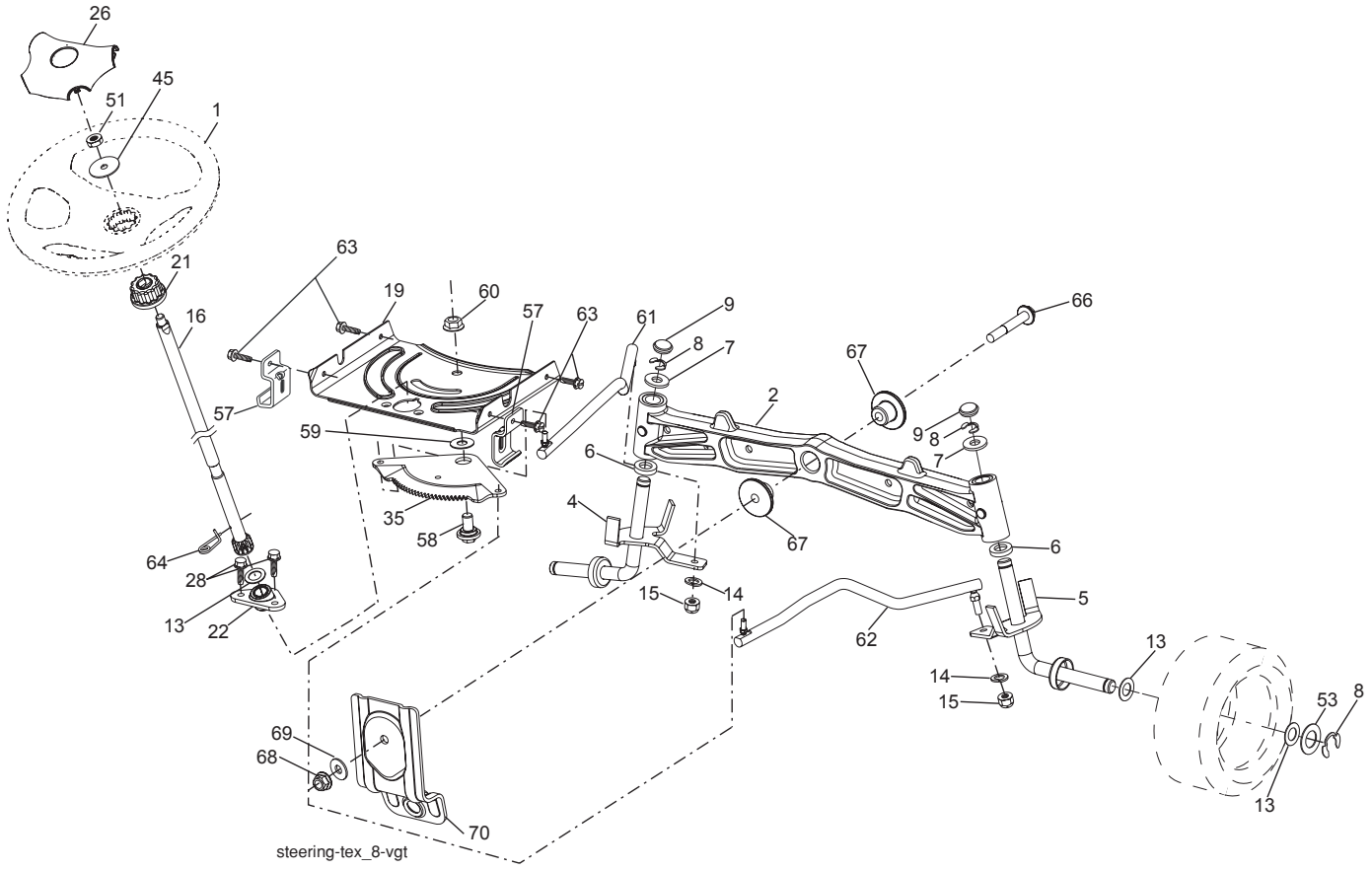

KEY NO.	PART NO.	DESCRIPTION
1	532 19 39-43	Wheel, Steering
2	532 19 59-68	Axle Asm., Front
4	532 40 30-87	Spindle Asm., LH
5	532 40 30-88	Spindle Asm., RH
6	532 12 49-31	Bearing, Race Thrust Harden
7	532 12 17-48	Washer 25/32 x 1-5/8 x 16 Ga.
8	812 00 00-29	Ring, Klip #T5304-75
9	532 12 12-32	Cap, Spindle
13	532 12 17-49	Washer 25/32 x 1-1/4 x 16 Ga.
14	810 04 06-00	Washer, Lock Hvy Hlcl Spr 3/8
15	873 54 06-00	Nut, Crown Lock 3/8-24 unf
16	532 19 47-46	Shaft Steering
19	532 19 47-29	Plate Steering
21	532 18 67-37	Adapter, Wheel Steering
22	532 19 48-45	Bushing, Strg. Blk
26	532 19 36-52	Insert, Wheel Steering
28	817 00 06-12	Screw 3/8-16 x 3/4
35	532 19 47-32	Gear, Sector Plate
45	819 18 38-12	Washer 9/16 x 2-3/8 x 12 Ga.

KEY NO.	PART NO.	DESCRIPTION
51	873 94 08-00	Nut Hex Jam Toplock 1/2-20 unf
53	532 18 89-67	Washer Hardened .793 x 1.637 x .060
57	532 40 74-65	Bracket Upstop
58	532 19 47-47	Bolt Shoulder Sector Pivot CFM
59	532 19 47-48	Washer Thrust Sector Steering
60	873 97 10-00	Nut Flange Lock 5/8-11
61	532 19 47-40	Draglink LH
62	532 19 47-41	Draglink, RH
63	817 00 05-12	Screw 5/16-18 x 3/4
64	532 19 98-49	Retainer Clip Spring Steering
66	871 02 07-48	Bolt Hex Fghd 7/16-14 x 3 Serr
67	532 19 47-37	Bushing PM Front Axle
68	873 90 07-00	Nut Lock Flange 7/16-14 Gr. 5
69	532 19 91-62	Washer 1.5 x .505 x .118
70	532 19 61-97	Bracket Deck Susp. Front

NOTE: All component dimensions given in U.S. inches
1 inch = 25.4 mm

MOWER LIFT

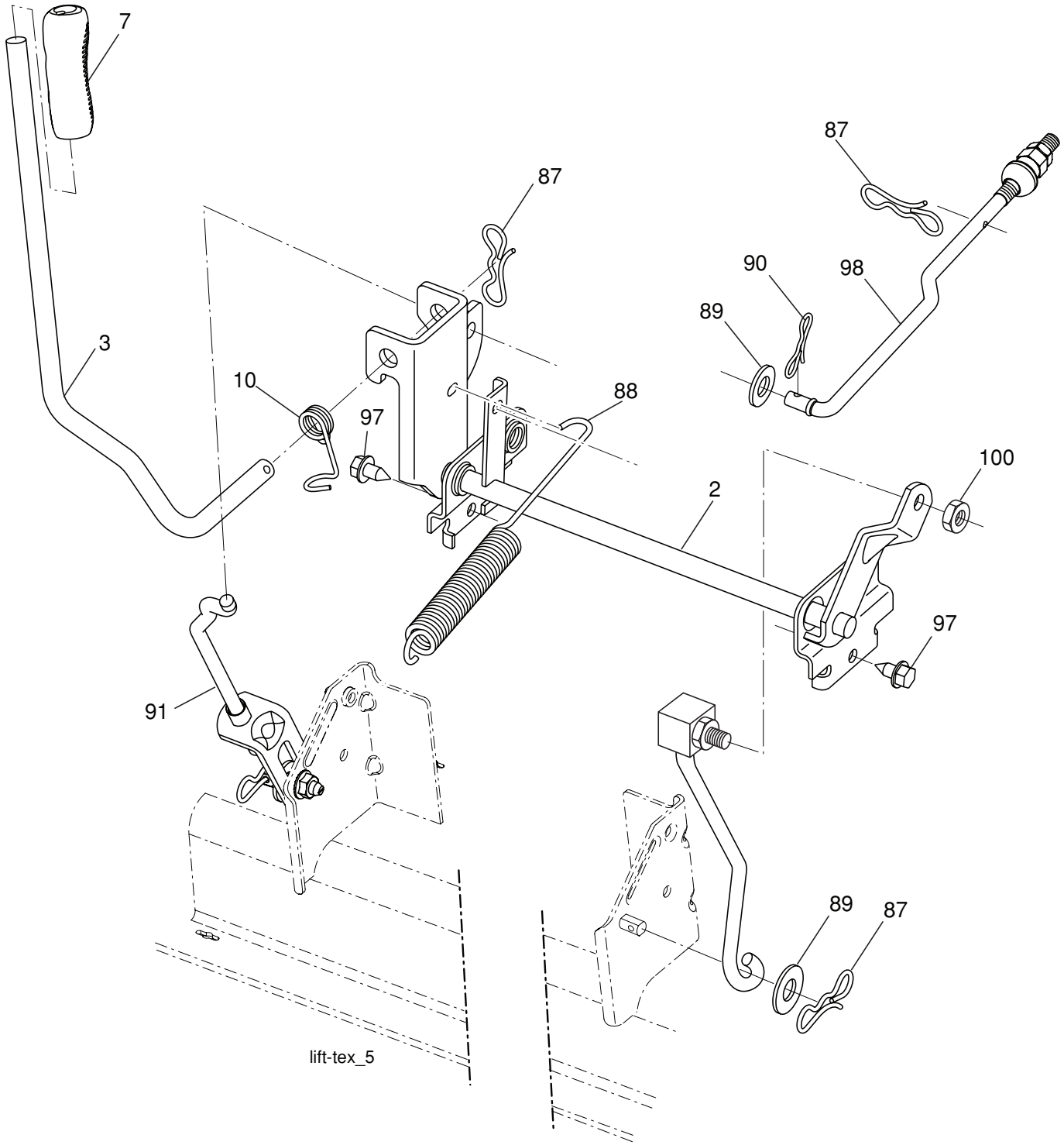

KEY NO.	PART NO.	DESCRIPTION
2	532 19 52-23	Shaft Asm., Lift
3	532 19 52-31	Lever Asm., Lift
7	532 41 15-55	Grip, Lever
10	532 19 63-14	Spring Torsion
87	532 19 42-09	Pin Cotter 7/16 Bow Tie Lock
88	532 19 53-03	Spring Lift Assist
89	819 19 19-12	Washer Clear Zinc
90	532 19 42-08	Pin Cotter 5/16 Bow Tie Lock

KEY NO.	PART NO.	DESCRIPTION
91	532 19 51-81	Link Lift Susp Mower Rear
97	817 06 06-12	Screw 3/8-16 x .75 Smgml Tap/R.Z
98	532 19 52-70	Link Lift Susp. Front Mower
100	873 93 06-00	Nut Lock 3/8 - 16

NOTE: All component dimensions given in U.S. inches
1 inch = 25.4 mm

ENGINE

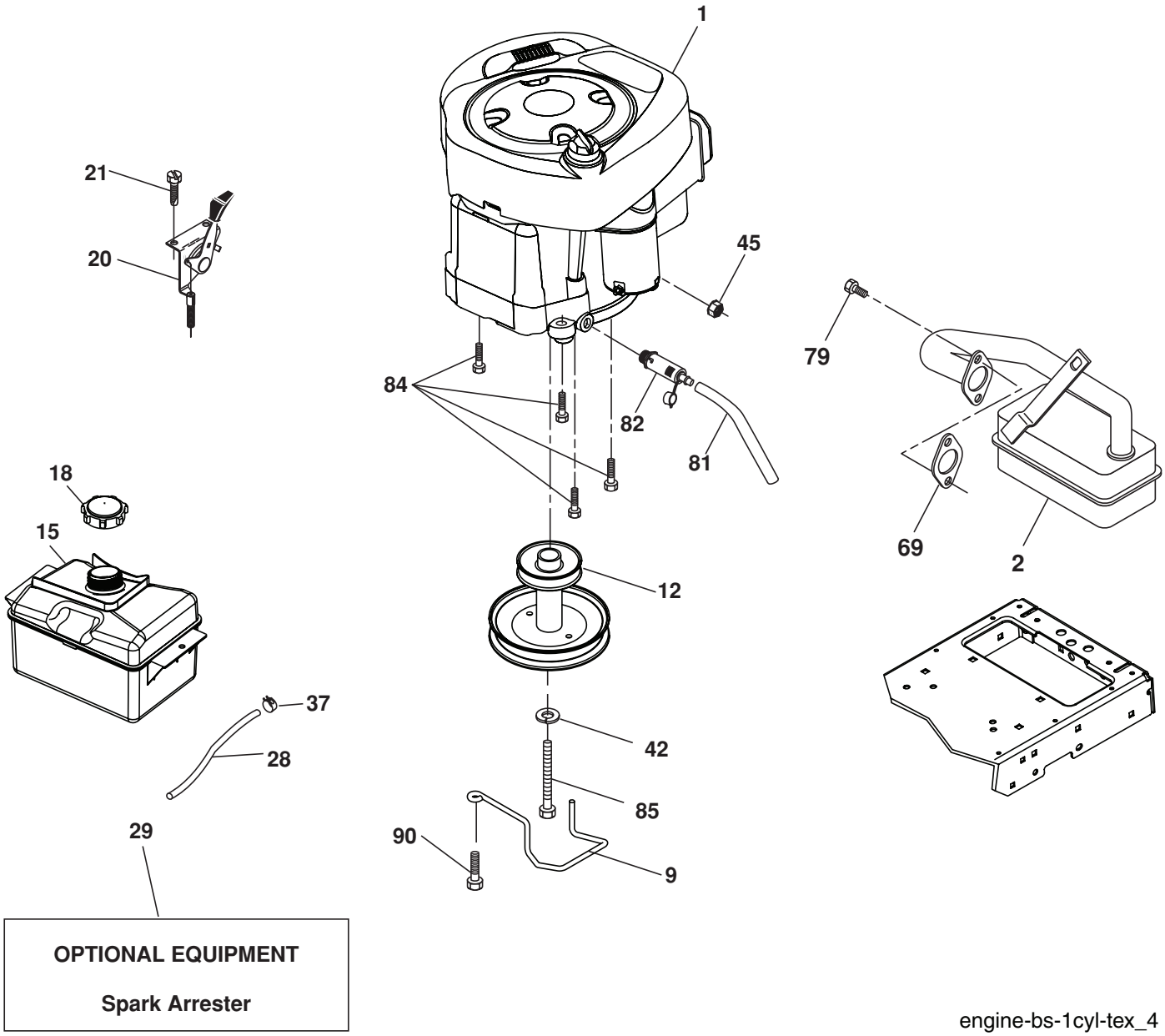
1
21
20
45
79
84
82
81
18
15
69
2
12
37
28
42
85
90
9
29
OPTIONAL EQUIPMENT
Spark Arrester
engine-bs-1cyl-tex_4

ENGINE

KEY NO.	PART NO.	DESCRIPTION
1	- - - - - -	Engine Briggs Model No. 31P977
2	532 13 73-52	Muffler
9	532 19 43-20	Keeper Belt Engine
12	532 40 54-71	Pulley Engine
15	532 40 74-89	Tank Fuel
18	532 19 77-25	Cap Asm
20	532 40 15-08	Control Throttle/Choke
21	532 19 16-11	Screw 10 x 3/4 Single Lead Hex
28	532 40 11-37	Fuel Line
29	532 13 71-80	Spark Arrester Kit
37	532 12 34-87	Clamp Hose
42	810 04 07-00	Washer Lock 7/16
45	873 51 04-00	Nut Keps Hex 1/4-20 unc
69	532 16 52-91	Gasket
79	532 19 23-34	Screw Socket Hd. 5/16 - 18 x .75
81	532 14 84-56	Tube Drain Oil Easy
82	532 18 16-54	Plug Drain Oil
84	817 06 06-20	Screw 3/8-16 x 1-1/4
85	532 17 39-37	Bolt 5/16 - 20 x 4 x Gr. 5 - 1.5
90	817 00 06-16	Screw 3/8-16 x 1

NOTE: All component dimensions given in U.S. inches
1 inch = 25.4 mm

For engine service and replacement parts, call the toll free number for your engine manufacturer listed below:

Briggs & Stratton	1-800-233-3723
Kohler Co.	1-800-544-2444
Tecumseh Products	1-800-558-5402
Honda Engines	1-800-426-7701
Kawasaki	1-949-460-5688

Engine Power Rating Information

The gross power rating for individual gas engine models is labeled in accordance with SAE (Society of Automotive Engineers) code J11940 (Small Engine Power & Torque Rating Procedure), and rating performance has been obtained and corrected in accordance with SAE J1995 (Revision 2002-5). Actual gross engine power will be lower and is affected by, among other things, ambient operating conditions and engine-to-engine variability. Given both the wide array of products on which engines are placed and the variety of environmental issues applicable to operating the equipment, the gas engine will not develop the rated gross power when used in a given piece of power equipment (actual “on-site” or net horsepower). This difference is due to a variety of factors including, but not limited to, accessories (air cleaner, exhaust, charging, cooling, carburetor, fuel pump, etc.), application limitations, ambient operating conditions (temperature, humidity, altitude), and engine-to-engine variability. Due to manufacturing and capacity limitations, Briggs & Stratton may substitute an engine of higher rated power for this Series engine.

TRACTOR - MODEL NO. YTH2042

MOWER DECK

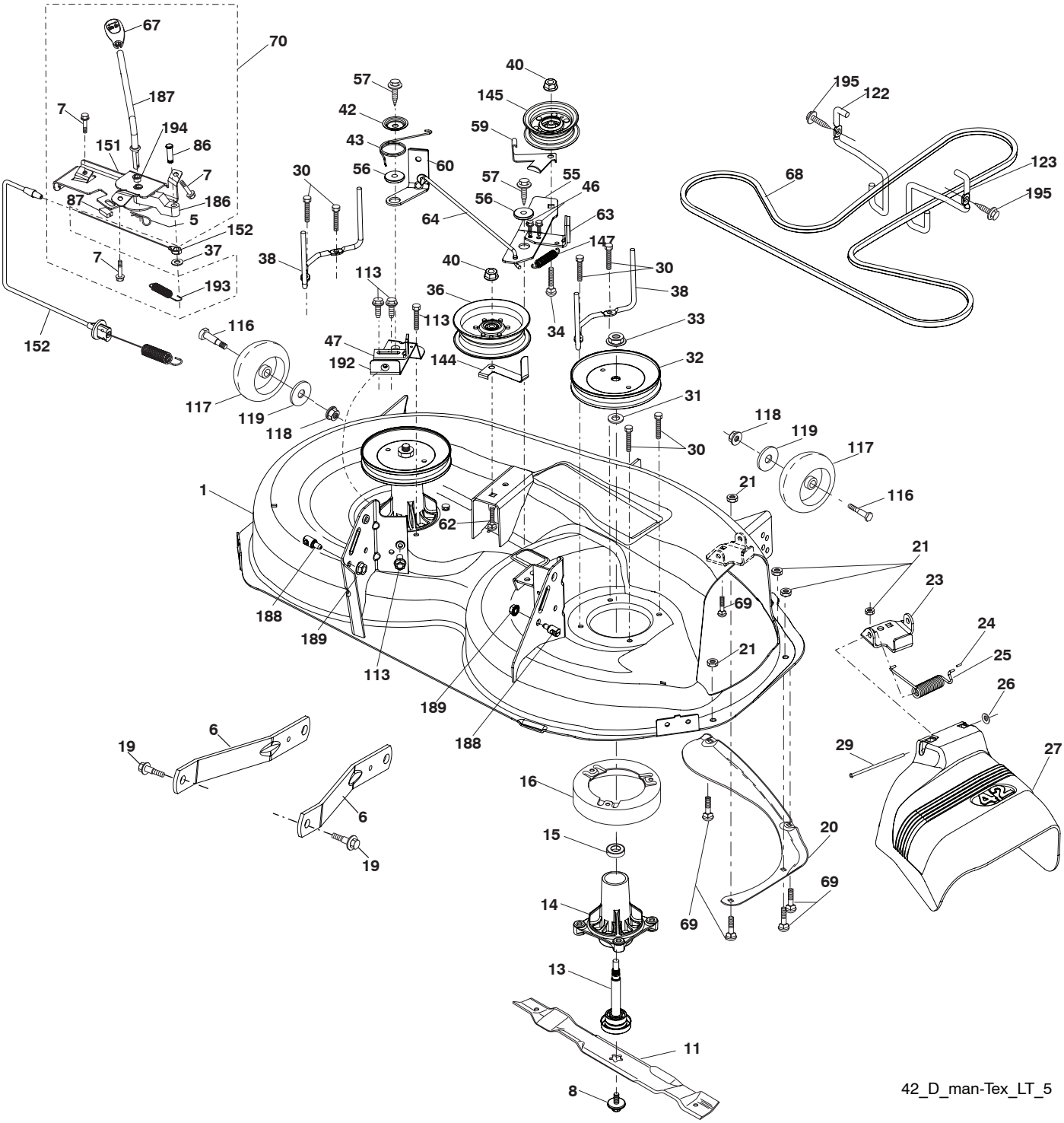

MOWER DECK

KEY NO.	PART NO.	DESCRIPTION
1	532 40 29-99	Deck Weldment Mower
5	532 12 46-70	Retainer Spring
6	532 19 51-86	Arm Suspension
7	532 19 16-11	Screw 10 x 3/4 Single Lead Hex
8	532 19 30-03	Bolt/Washer asm 7/16-20 unf
11	532 13 89-71	Blade, 42" Hi-Lift (For bagging or discharge)
- -	532 13 41-49	Blade, 42" Mulching Std (For mulching mowers only)
- -	532 13 97-75	Blade, 42" Mulching Premium (For better wear when mulching)
13	532 19 28-72	Shaft Assembly, Mandrel
14	532 18 72-81	Housing, Mandrel
15	532 11 04-85	Bearing, Ball, Mandrel
16	532 17 44-93	Stripper, Mower Deck
19	532 19 65-39	Bolt, Shoulder
20	532 15 97-70	Baffle, Vortex
21	873 68 05-00	Nut, Crownlock 5/16-18 unc
23	532 19 25-57	Bracket, Deflector
24	532 10 53-04	Cap, Sleeve
25	532 19 70-26	Spring, Torsion, Deflector
26	532 11 04-52	Nut, Push
27	532 40 30-04	Shield, Deflector
29	532 13 14-91	Rod, Hinge
30	532 17 39-84	Screw Thdrol Rolling Wsh Hd
31	532 18 76-90	Washer, Spacer
32	532 19 59-45	Pulley, Mandrel
33	532 40 02-34	Nut, Toplock, Flanged
34	872 11 06-12	Bolt Carr Sh. 3/8-16 x 1-1/2 Gr.- 5
36	532 19 61-06	Pulley, Idler, Flat
37	819 13 13-16	Washer
38	532 19 91-89	Keeper Belt LH Mandrel
40	873 90 06-00	Nut, Lock Flg. 3/8-16 unc
42	532 19 84-10	Spring Torsion Brake
43	532 19 72-56	Spring Torsion Retainer
46	532 13 77-29	Screw Thd Roll 1/4-20 x 5/8
47	532 19 72-50	Bracket Clutch Cable
55	532 19 72-49	Arm, Idler
56	532 19 90-92	Spacer, Retainer
57	817 00 06-16	Screw 3/8-16 x 1
59	532 14 10-43	Guard, Tuv Idler
60	532 19 74-02	Arm Brake Mower
62	872 11 06-16	Bolt Rd Hd Sq Nk 3/8-16 unc x - 2
63	532 19 94-78	Arm Brake Mower
64	532 19 99-18	Link Brake Asm
67	532 40 30-12	Handle Clutch Cable
68	532 19 72-53	V-Belt
69	872 14 05-05	Bolt
70	532 40 65-63	Clutch Asm Manual
86	532 19 77-98	Pin Attachment Cable
87	532 19 78-02	Switch Interlock Clutch Cable
113	817 00 05-10	Bolt 5/16-18
115	872 11 05-05	Bolt Carr. 5/16-18 x 5/8
116	532 19 34-06	Bolt, Shoulder
117	532 17 48-73	Wheel, Gauge
118	873 93 06-00	Nut, Crownlock 3/8-1
119	819 13 20-12	Washer 13/32 x 1-1/4 x 12 Ga.
122	532 19 72-58	Keeper Belt Engine LH
123	532 19 72-59	Keeper Belt Engine RH
144	532 19 92-04	Keeper Belt
145	532 17 79-68	Pulley Idler
147	532 40 19-71	Spring Return
151	532 40 65-60	Bracket Clutch
152	532 40 83-19	Manual Clutch Cable
186	532 19 77-99	Arm Actuator
187	532 40 65-62	Lever Control
188	532 19 51-61	Stud Fastener
189	873 90 05-00	Nut Lock Hex Flange
192	532 19 72-60	Bracket Brake Stand LH
193	532 19 78-01	Spring Plunger Activator
194	532 19 77-97	Bearing Control Lever Clutch
195	817 00 06-12	Screw Hex Wsh THDR 3/8-16 x 3/4
- -	532 19 28-70	Mandrel Assembly (Includes housing, shaft and shaft hardware only-pulley not included)
- -	532 40 20-22	Replacement Mower, Complete

NOTE: All component dimensions given in U.S. inches
1 inch = 25.4 mm

SEAT ASSEMBLY

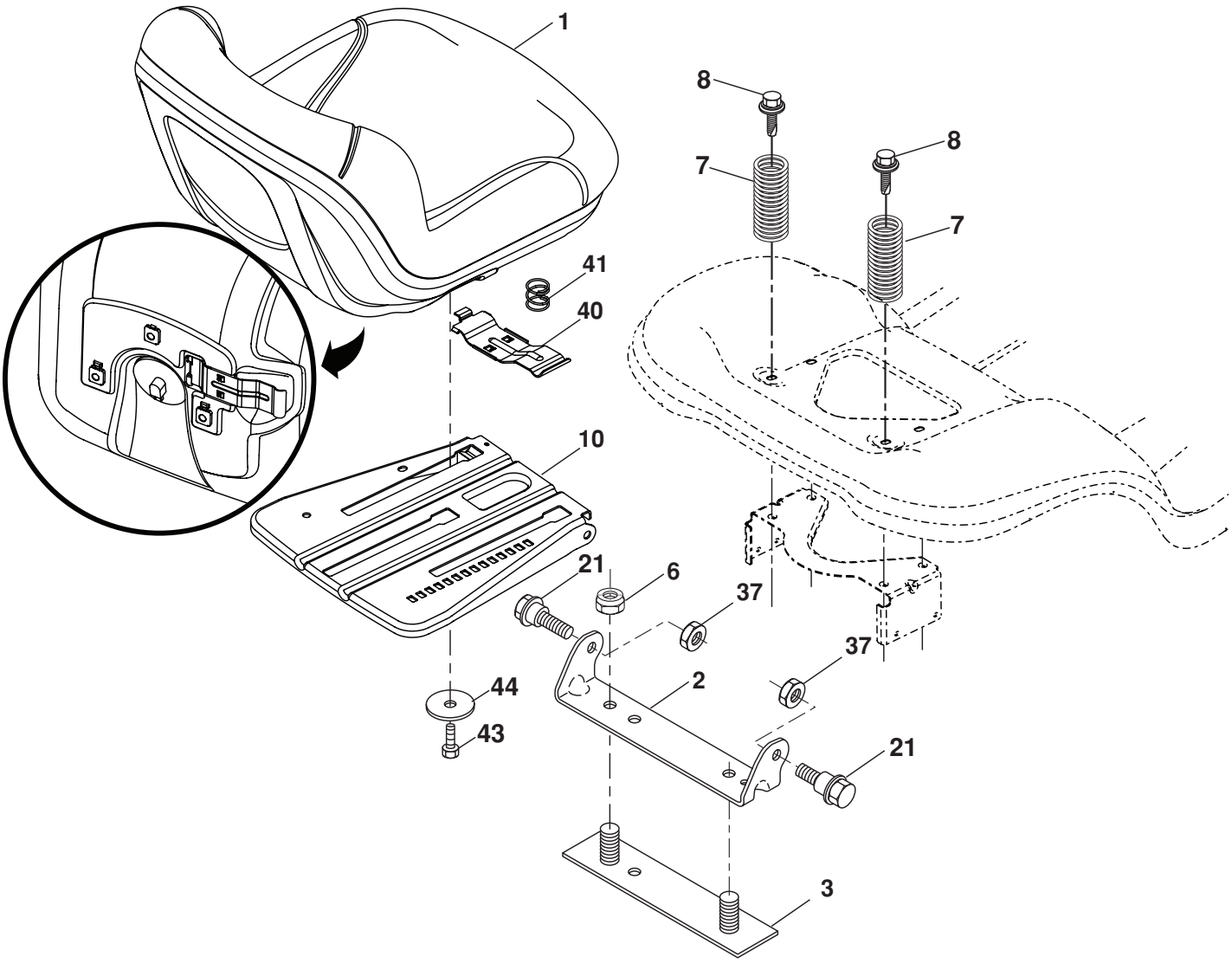

seat-tex_7-vgt

KEY NO.	PART NO.	DESCRIPTION
1	532 19 75-18	Seat
2	532 18 01-66	Bracket Pivot Fender
3	532 14 06-75	Strap, Asm Fender
6	873 80 06-00	Nut, Lock W/Ins. 3/8-16 unc
7	532 12 41-81	Spring, Seat Cprsn
8	532 17 18-77	Bolt 5/16-18 uncx 3/4 w/Sems
10	532 19 69-77	Pan, Seat
21	532 17 18-52	Bolt, Shoulder 5/16-18
37	873 80 05-00	Nut, Lock 5/16-18 unc
40	532 19 76-61	Handle Slide Seat
41	532 19 82-00	Spring Latch Seat
43	874 76 06-12	Bolt 3/8-16 x 3/4
44	819 13 38-12	Washer 13/32 x 2-3/8 x 12 Ga.

NOTE: All component dimensions given in U.S. inches
1 inch = 25.4 mm