Husqvarna

Gasoline containing up to 10% ethanol (E10) is acceptable for use in this machine. The use of any gasoline exceeding 10% ethanol (E10) will void the product warranty.

Operator Manual

PZ34 / 966553901

Please read the operator manual carefully and make sure you understand the instructions before using the machine.

When this product is worn out and no longer used, it should be returned to the reseller or other party for recycling.

To implement improvements, specifications and designs can be altered without prior notification.

Note that no legal demands can be placed based on the information contained in these instructions.

Use only original parts for repairs. The use of other parts voids the warranty.

Do not modify or install non-standard equipment to the unit without consent from the manufacturer. Modifications to the unit may cause unsafe operations or damage the unit.

©2013. All rights reserved.
Orangeburg, SC. Printed in U.S.A.

CONTENTS

INTRODUCTION 5
- Driving and Transport on Public Roads 5
- Towing 5
- Operating 5
- Good Service 6
  - Manufacturing Number 6

SYMBOLS AND DECALS 7
SAFETY 9
- Safety Instructions 9
- Personal Safety Equipment 11
- Slope Operation 11
- Safe Handling of Gasoline 13
- General Maintenance 14
- Towing 16
- Transport 16
- Rollover Protection System (ROPS) 17
- Spark Arrestors 17

CONTROLS 18
- Control Locations 18
- Motion Control Levers 19
- Parking Brake 20
- Throttle Control 20
- Blade Switch 20
- Ignition Switch 21
- Choke Control 22
- Fuses 22
- Hour Meter 22
- Tracking Knob 23
- Cutting Height Pedals 23
- Seat Adjustment Lever 24
- Fuel Shut Off Valve 24
- Fuel Tank 25

OPERATION 26
- Training 26
- Steering 26
- Roll Bar and Safety Belt 27
- Before Starting 27
- Starting the Engine 28
- Weak Battery 32
  - Jumper Cables Use 32
- Running 33
- Operating on Hills 34
- Mowing Tips 35
- Stopping the Engine 36
- Moving Machine By Hand 37
  - Bypass Valves 37

MAINTENANCE 38
- Battery 40
- Safety System 41
- Fuel Filter 41
- Tire Pressures 41
- Parking Brake 42
  - Parking Brake Adjustments 42
- Deck Belt 44
- Pump Belt 45
- V-belts 45
- Cutting Blades 46
- Adjusting the Mower Deck 47
  - Leveling Deck 47
  - Anti-scalp Rollers 48
- Caster Wheels 48
- Hardware 49
- Cleaning 49

LUBRICATION 50
- Lubrication Schedule 50
- Wheel and Deck Zerks 51
  - Front Wheel Mount 51
  - Front Wheel Bearings 51
  - Deck Spindles 51
- Hydraulic Drive 52
  - Fluid and Filter Change 52
- Transmission Purging Procedures 53

TROUBLESHOOTING GUIDE 54
STORAGE 56
- Winter Storage 56
- Service 56

WIRING DIAGRAMS 57
TECHNICAL DATA 58
- Torque Specifications 60

CONFORMITY CERTIFICATES 61
SERVICE JOURNAL 62

WARNING!

Failure to follow cautious operating practices can result in serious injury to the operator or other persons. The owner must understand these instructions, and must allow only trained persons who understand these instructions to operate the mower.

Each person operating the mower must be of sound mind and body and must not be under the influence of any mind altering substance.

WARNING!

Engine exhaust, some of its constituents, and certain vehicle components contain or emit chemicals known to the State of California to cause cancer and birth defects or other reproductive harm.

WARNING!

Battery posts, terminals and related accessories contain lead and lead compounds, chemicals known to the State of California to cause cancer and birth defects or other reproductive harm. Wash hands after handling.

INTRODUCTION

Congratulations

Thank you for purchasing a Husqvarna ride-on mower. This machine is built for superior efficiency to rapidly mow primarily large areas. A control panel easily accessible to the operator and a hydrostatic transmission regulated by steering controls both contribute to the machine's performance.

This manual is a valuable document. Read the contents carefully before using or servicing the machine. The following of instructions (use, service, maintenance) by all who operate this machine is important for the safety of the operator and others. It can also considerably increase the life span of the machine and increase its resale value.

If you sell your machine, be sure to give the operator manual to the new owner.

The final chapter of this operator manual provides a Service Journal. Ensure that service and repair work are documented. A well-kept service journal reduces service costs for the maintenance and affects the machine's resale value. Please contact your dealer for more information. Take the operator manual along when the machine is taken to your dealer for service.

General

In this operator manual, left and right, backward and forward are used in relation to the machine's normal driving direction.

Continuous dedication to improve our products require that specifications and design are subject to change without notice.

Driving and Transport on Public Roads

Check applicable road traffic regulations before transporting on public roads. If the machine is transported, you must always use approved fastening equipment and ensure that the machine is well anchored. DO NOT operate this machine on public roadways.

Towing

If machine is equipped with a tow hitch, use extreme caution when towing. Never allow children or others in or on the towed equipment. Make wide turns to avoid jack-knifing. Travel slowly and allow extra distance to stop.

Do not tow on sloped ground. The weight of the towed equipment may cause loss of traction and loss of control.

Follow the manufacturer's recommendation for weight limits for towed equipment. Do not tow near ditches, canals, and other hazards.

Operating

This machine is constructed only for mowing grass on lawns and even ground without obstacles such as stones, tree stumps, etc. The machine can also be used for other tasks when equipped with special accessories provided by the manufacturer. Operating instructions for the accessories are provided with delivery. All other types of uses are incorrect. The manufacturer's directions concerning operation, maintenance, and repairs must be carefully followed.

Lawn mowers and all power equipment can be potentially dangerous if used improperly. Safety requires good judgment, careful use in accordance with these instructions and common sense.

The machine must only be operated, maintained, and repaired by persons familiar with the machine's special characteristics and who are also knowledgeable about the safety instructions. Use only approved repair parts to maintain this machine.

Accident prevention regulations, other general safety regulations, occupational safety rules, and traffic regulations must be followed without fail.

Unauthorized modifications to the design of the machine may absolve the manufacturer from liability for any resulting personal injury or property damage.

Good Service

Husqvarna's products are sold all over the world and only in specialized retail stores with complete service. This ensures that you as a customer receive only the best support and service. Before the product is delivered, the machine has, for example, been inspected and adjusted by your retailer. See the certificate in the Service Journal in this operator manual.

When you need spare parts or support in service questions, warranty issues, etc., please consult the following professional:

This manual belongs to the machine with the manufacturing number:	Engine	Transmission

Manufacturing Number

The machine's manufacturing number can be found on the printed plate affixed to the right side in the engine compartment. Stated on the plate, from the top are:

- The machine's type designation (I.D.).
- The manufacturer's type number (Model).
- The machine's serial number (Serial no.)

Please have the type designation and serial number available when ordering spare parts.

The engine's manufacturing number is stamped either on one of the valve covers or an affixed serial plate.

The plate states:

- The engine's model.
- The engine's type.
- Code

Please have these available when ordering spare parts.

The wheel motors and hydrostatic pumps have a barcode decal affixed at the rear.

SYMBOLS AND DECALS

These symbols are found on the machine and in the operator manual.

Study them carefully so that you know what they mean.

WARNING!

Xxxx xxxxxx xxxxx xxxx xxxxxxxxx xxxxxx xxxxxxxxx. xx xxxxxxxx xxxx xxxxxx.

IMPORTANT INFORMATION

Xxxx xxxxxx xxxxx xxxx xxxxxxxxx xxxxxx xxxxxxxxx. xx xxxxxxxx xxxx xxxxxx.

Used in this publication to notify the reader of a risk of personal injury or death, particularly if the reader should neglect to follow instructions given in the manual.

Used in this publication to notify the reader of a risk of material damage, particularly if the reader should neglect to follow instructions given in the manual. Used also when there is a potential for misuse or misassembly.

Reverse

Neutral

Fast

Slow

Choke

Fuel

Warning!

Parking Brake

CE conformity marking. Only for European market

Do not stand here

Use protective glasses

Use protective gloves

Noise emissions to the surroundings.

Australia and New Zealand only

Electromagnetic Compatibility (EMC) Compliance

Australia and New Zealand only

SYMBOLS AND DECALS

Read Operator Manual

Shut off engine and remove key before performing any maintenance or repair work

Keep a safe distance from the machine

Use on slopes no greater than 10°

No passengers

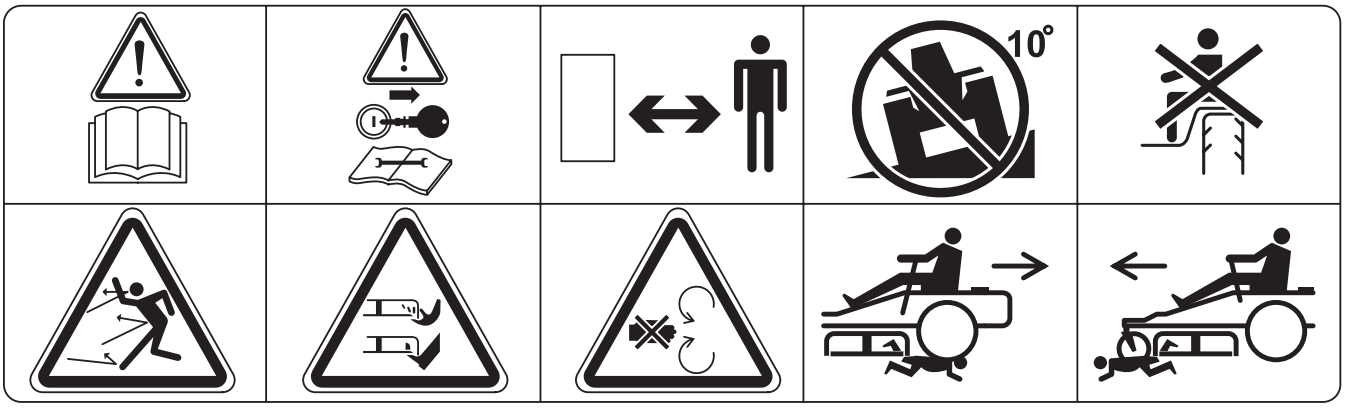

Whole body exposure to thrown objects

Severing of fingers and toes

Do not open or remove safety shields while engine is running

Careful backing up, watch for other people

Careful going forward, watch for other people

Moving sharp blades under cover

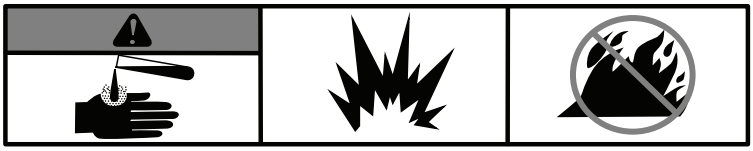

Battery acid is corrosive, explosive and flammable

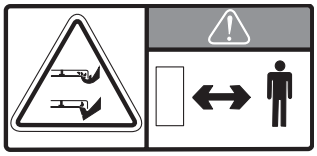

Warning! Rotating blades, keep away from the discharge deck

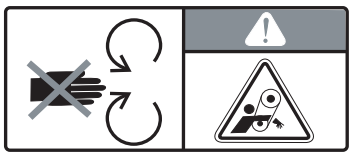

Do not touch parts

Safety Instructions

These instructions are for your safety. Read them carefully.

WARNING!

THIS CUTTING MACHINE IS CAPABLE OF AMPUTATING HANDS AND FEET AND THROWING OBJECTS. FAILURE TO OBSERVE THE FOLLOWING SAFETY INSTRUCTIONS COULD RESULT IN SERIOUS INJURY OR DEATH.

WARNING!

This symbol means that important safety instructions need to be emphasized. It concerns your safety.

General Operation

- Read, understand, and follow all instructions on the machine and in the manual before starting.
- It is recommended that someone be aware that you are mowing and can provide help in case of injury or accident.
- Do not put hands or feet near rotating parts or under the machine. Keep clear of the discharge opening at all times.
- Only allow responsible adults, who are familiar with the instructions, to operate the machine.
- Clear the area of objects such as rocks, toys, wire, etc., which could be picked up and thrown by the blades.
- Be sure the area is clear of bystanders before operating. Stop machine if anyone enters the area.
- Never carry passengers. The machine is only intended for use by one person.
- Do not mow in reverse unless absolutely necessary. Always look down and behind before and while backing.
- Never direct discharged material toward anyone. Avoid discharging material against a wall or obstruction. Material may ricochet back toward the operator. Stop the blades when crossing gravel surfaces.
- Do not operate machine without the entire grass catcher, discharge guard, or other safety devices in place and working
- Slow down before turning.
- Never leave a running machine unattended. Always turn off blades, set parking brake, stop engine, and remove keys before dismounting.

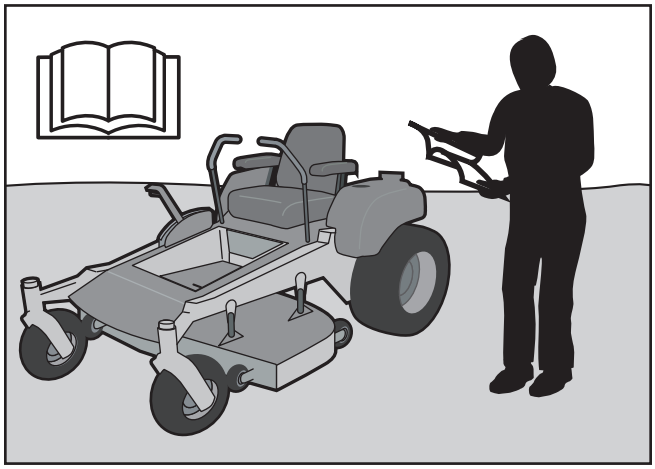

8011-512

Read the operator manual before starting the machine

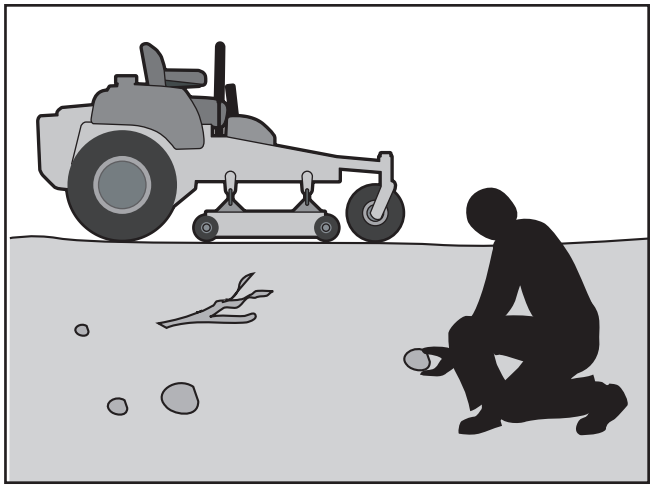

8011-513

Clear the area of objects before mowing

- Disengage blades when not mowing. Shut off engine and wait for all parts to come to a complete stop before cleaning the machine, removing the grass catcher, or unclogging the discharge guard.
- Operate machine only in daylight or good artificial light.
- Do not operate the machine while under the influence of alcohol or drugs.
- Watch for traffic when operating near or crossing roadways.
- Use extra care when loading or unloading the machine into a trailer or truck.
- Always wear eye protection when operating machine.
- Wear proper Personal Protective Equipment (PPE) while operating this machine, including (at a minimum) sturdy footwear, eye protection, and hearing protection. Do not mow in shorts and/or footwear with open toes.
- Data indicates that operators age 60 years and above are involved in a large percentage of riding mower-related injuries. These operators should evaluate their ability to operate the riding mower safely enough to protect themselves and others from serious injury.
- Follow the manufacturer's recommendation for wheel weights or counterweights.
- Anyone who operates this machine must first read and understand this Operation Manual. Local laws may regulate the age of the user.
- Keep machine free of grass, leaves or other debris buildup which can touch the hot exhaust or engine parts and burn.
- Do not allow the mower deck to plow leaves or other debris, causing buildup to occur.
- Clean any oil or fuel spillage before operating or storing the machine.
- Allow machine to cool before storage.

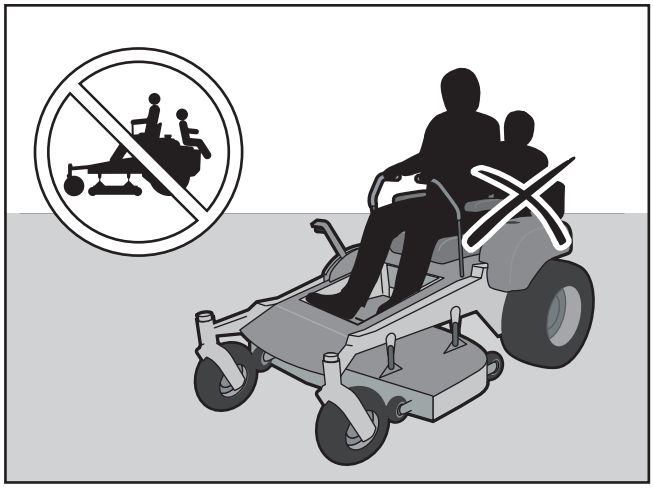

8011-520

Never take passengers

WARNING!

Engine exhaust and certain vehicle components contain or emit chemicals considered to cause cancer, birth defects, or other reproductive system damage. The engine exhaust contains carbon monoxide, which is an odorless, colorless, poisonous gas. Do not use the machine in enclosed spaces.

Personal Safety Equipment

WARNING!

When using the machine, approved personal protective equipment (shown in illustrations) shall be used. Personal protective equipment cannot eliminate the risk of injury but it will reduce the degree of injury if an accident does happen. Ask your retailer for help in choosing the right equipment.

- Make sure that you have first aid equipment close at hand when using the machine.
- Never use the machine when barefoot.
- Always wear protective shoes or boots, preferably with steel toe caps.
- Always wear approved protective glasses or a full visor when assembling or driving.
- Always wear gloves when handling the blades.
- Never wear loose clothing that can get caught in moving parts.
- Use ear protectors to avoid damage to hearing.

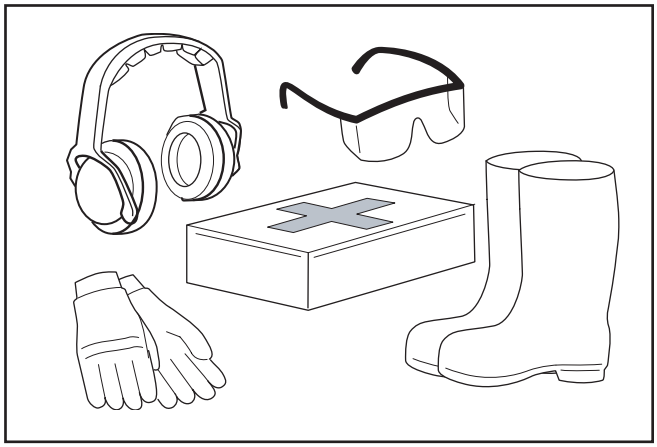

8011-670

Personal protective equipment

Slope Operation

Slopes are a major factor related to loss of control and tip-over accidents, which can result in severe injury or death. Operation on all slopes requires extra caution. If you cannot back up the slope or if you feel uneasy on it, do not mow it.

- Mow up and down slopes (10 degrees maximum), not across.
- Watch for holes, ruts, bumps, rocks, or other hidden objects. Uneven terrain could overturn the machine. Tall grass can hide obstacles.
- Choose a low ground speed so that you will not have to stop while on the slope.
- Do not mow on wet grass. Tires may lose traction.
- Avoid starting, stopping, or turning on a slope. If the tires lose traction, disengage the blades and proceed slowly straight down the slope.
- Keep movement on the slopes slow and gradual. Do not make sudden changes in speed or direction, which could cause machine to roll over.
- Use extra care while operating machine with grass catchers or other attachments; they can affect the stability of the machine.

WARNING!

Do not drive up or down hills with slopes greater than 10 degrees. And do not drive across any slopes.

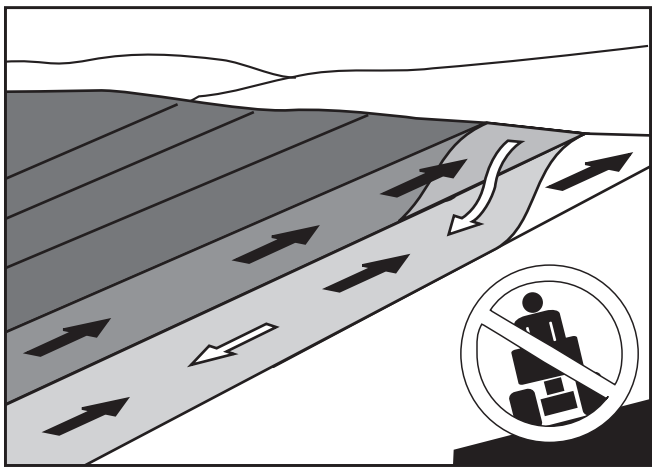

6003-004

Mow up and down, not side to side

- Do not use on steep slopes.
- Do not try to stabilize the machine by putting a foot on the ground.
- Do not mow near drop-offs, ditches, or embankments. The machine could suddenly roll over if a wheel is over the edge or if the edge caves in.

WARNING!

CHILDREN CAN BE INJURED BY THIS EQUIPMENT. The American Academy of Pediatrics recommends that children be a minimum of 16 years of age before operating a riding lawn mower. Keep children out of the mowing area and in the watchful care of a responsible adult other than the operator.

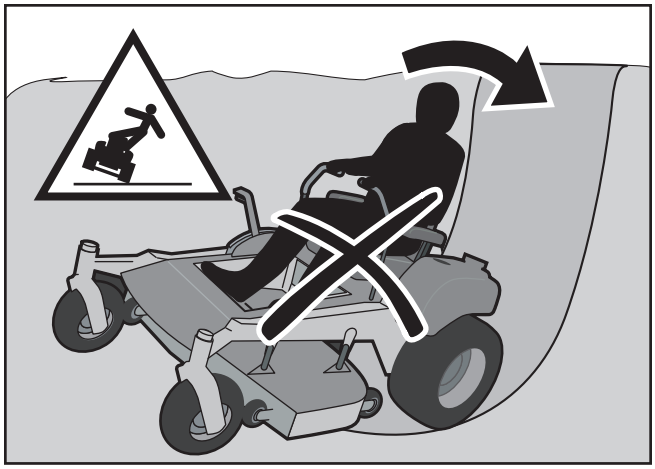

8011-518

Be extra cautious when driving on slopes

Children

Tragic accidents can occur if the operator is not alert to the presence of children. Children are often attracted to the machine and the mowing activity. *Never* assume that children will remain where you last saw them.

- Keep children out of the mowing area and in the watchful care of a responsible adult other than the operator.
- Be alert and turn machine off if a child enters the area.
- Before and while backing, look behind and down for small children.
- Never carry children, even with the blades shut off. They may fall off and be seriously injured or interfere with safe machine operation. Children who have been given rides in the past may suddenly appear in the mowing area for another ride and be run over or backed over by the machine.
- Never allow children to operate the machine.
- Use extra care when approaching blind corners, shrubs, trees, or other objects that may block your view of a child.

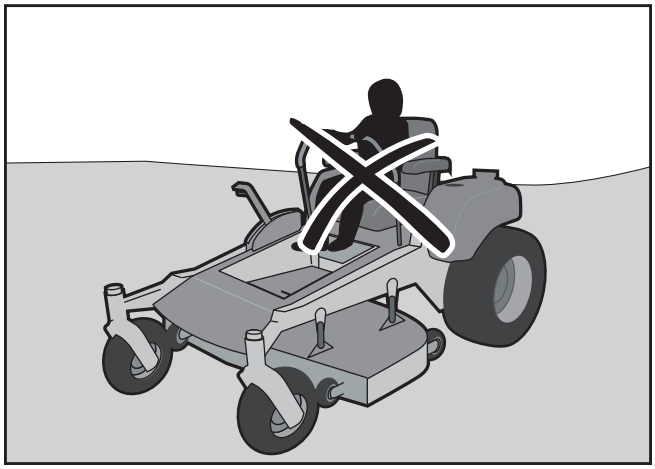

8011-518

Never allow children to operate the machine

8011-517

Keep children away from work area

Safe Handling of Gasoline

WARNING!

The engine and the exhaust system become very hot during operation.

There is risk for burns if touched.

Allow engine and exhaust system to cool before refueling.

To avoid personal injury or property damage, use extreme care in handling gasoline. Gasoline is extremely flammable and the vapors are explosive.

- Extinguish all cigarettes, cigars, pipes, and other sources of ignition.
- Use only approved gasoline containers.
- Never remove gas cap or add fuel with the engine running. Allow engine to cool before refueling.
- Never fuel the machine indoors.
- Never store the machine or fuel container where there is an open flame, spark, or pilot light such as on a water heater or other appliance.
- Before you begin refueling, minimize the risk of static electricity by touching a metal surface.
- Never fill containers inside a vehicle or on a truck or trailer bed with plastic liner. Always place containers on the ground away from the vehicle when filling.
- Remove gas-powered equipment from the truck or trailer and refuel it on the ground. If this is not possible, refuel such equipment with a portable container, rather than from a gasoline dispenser nozzle.
- Keep the nozzle in contact with the rim of the fuel tank or container opening at all times until fueling is complete. Do not use a nozzle lock-open device.
- If fuel is spilled on clothing, change clothing immediately.
- Never overfill fuel tank. Replace gas cap and tighten securely.
- Do not start the engine near spilled fuel.
- Never use gasoline as a cleaning agent.
- If leaks arise in fuel system, engine must not be started until problem has been resolved.
- Check the fuel level before each use and leave space for the fuel to expand, as the heat from the engine and the sun may otherwise cause the fuel to expand and overflow.

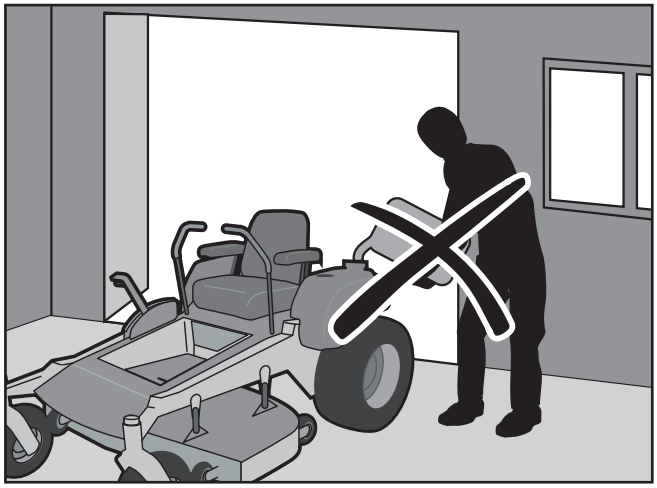

8011-516

Never fill the fuel tank indoors

WARNING!

The engine must not be started when the driver's floor plate or any protective plate for the mower deck's drive belt is removed.

General Maintenance

- Never operate machine in a closed area.
- Keep all nuts and bolts tight to be sure the equipment is in safe working condition.
- Never tamper with safety devices. Check their proper operation regularly.
- Keep machine free of grass, leaves, or other debris buildup. Clean oil or fuel spillage and remove any fuel-soaked debris. Allow machine to cool before storing.
- If you strike a foreign object, stop and inspect the machine. Repair, if necessary, before restarting.
- Never make any adjustments or repairs with the engine running.
- Check grass catcher components and the discharge guard frequently and replace with manufacturer's recommended parts, when necessary.
- Mower blades are sharp. Wrap the blade or wear gloves, and use extra caution when servicing them.
- Check brake operation frequently. Adjust and service as required.
- Maintain or replace safety and instruction labels, as necessary.
- Do not modify safety equipment. Check regularly to be sure it works properly. The machine must not be driven with defective or unmounted protective plates, protective cowlings, safety switches, or other protective devices.
- Do not change the settings of governors and avoid running the engine with overly high engine speeds. If you run the engine too fast, you risk damaging the machine components.
- Be very careful when handling battery acid. Acid on skin can cause serious corrosive burns. If you spill battery acid on your skin, rinse immediately with water.
- Acid in the eyes can cause blindness, contact a doctor immediately.
- Be careful when servicing the battery. Explosive gases form in the battery. Never perform maintenance on the battery when smoking or near open flames or sparks.
- The battery can explode and cause serious injury or damage.
- Make sure that the equipment is in good condition and that all nuts and bolts, especially those fastening the blade attachments, are properly tightened and torqued.

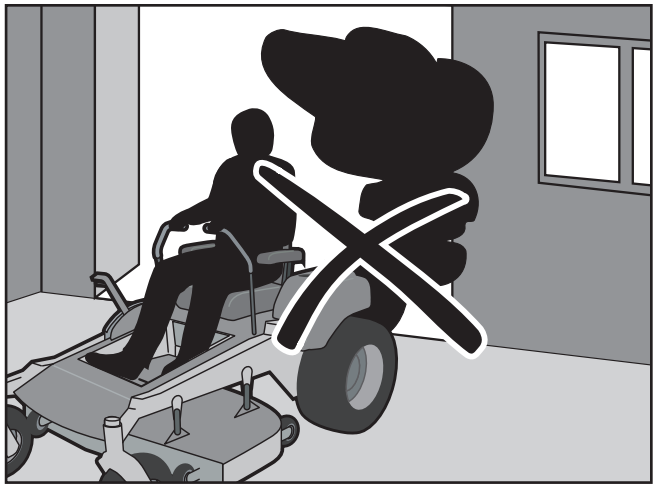

8011-515

Never drive the machine in an enclosed space

WARNING!

Use protective glasses for maintenance work.

WARNING!

The battery contains lead and lead compounds, chemicals that are considered to cause cancer, birth defects, and other reproductive system damage. Wash your hands after handling the battery.

Sparking can occur when working with the battery and the heavy cables of the starter circuit. This can cause battery explosion, fire or eye injury. Sparking in this circuit can not occur after the chassis cable (normally negative, black) is removed from the battery.

WARNING!

Avoid electrical sparking and its consequences by the following routines:

- Use protective goggles.
- Ensure that the fuel filler cap is mounted tightly and no flammable substances are stored in an open vessel.
- Never work with the starter circuit if there is spilled fuel.
- Disconnect the chassis cable from the battery first and reconnect it last.
- Do not make a bridge short circuit across the starter relay to run the starter.

6003-009

Do not smoke when performing maintenance on the battery. The battery can explode and cause serious injury/damage.

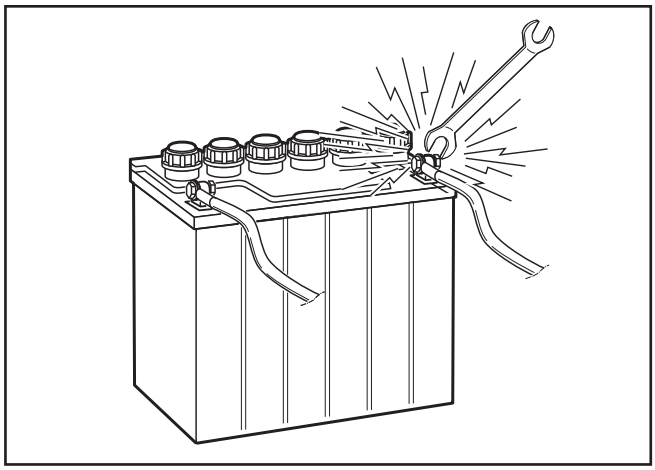

8009-728

Risk of sparking

- Never use the machine indoors or in spaces lacking proper ventilation. The exhaust fumes contain carbon monoxide, an odorless, poisonous, and lethal gas.
- Stop to inspect the equipment if you run over or into anything. If necessary, make repairs before starting.
- Never make adjustments with the engine running.
- The machine is tested and approved only with the equipment originally provided or recommended by the manufacturer. Only use approved repair parts for the machine.
- The blades are sharp and can cause cuts and gashes. Wrap the blades or use protective gloves when handling them.
- Check the parking brake functions regularly. Adjust and service as necessary.
- Mulch blades should only be used in familiar areas when higher quality mowing is desired.
- Reduce the risk of fire by removing grass, leaves, and other debris that may have accumulated on the machine.
- Allow the machine to cool before putting it in storage.
- Regularly clean deck and underside of deck, avoid spraying engine and electrical components with water.

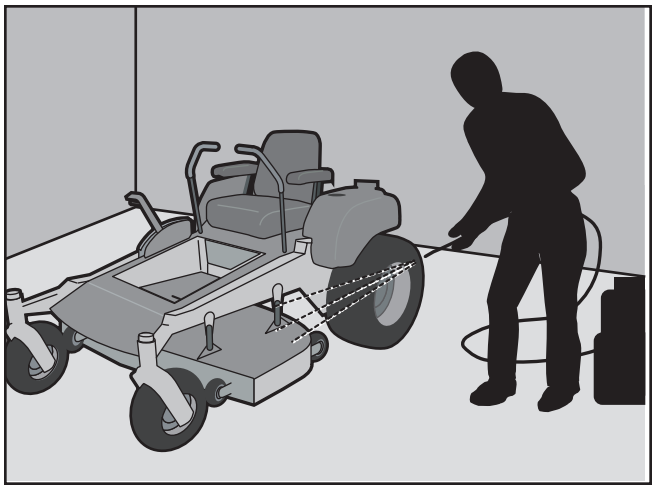

8011-514

Regularly clean deck

Transport

- The machine is heavy and can cause serious crushing injuries. Be extra cautious when it is loaded on or unloaded from a vehicle or trailer.
- Use an approved trailer to transport the machine. Activate the parking brake, turn off the fuel supply, and fasten the machine with approved fastening devices, such as bands, chains, or straps, when transporting.
- Do not operate this machine on public roadways.
- Check and abide by local traffic regulations before transporting the machine on any road.
- Do not tow this machine, it may cause damage to the drive system.
- Load the unit onto truck or trailer by driving up ramps of suitable strength using a slow speed. Do not lift! The machine is not intended to be lifted by hand.
- When loading or unloading this machine, do not exceed the maximum recommended operation angle of 10°.

WARNING!

Use extreme caution when loading the machine into a truck or trailer using ramps. There is the possibility of serious injury or death if the machine falls off the ramps.

Towing

If machine is equipped with a tow hitch, use extreme caution when towing. Never allow children or others in or on towed equipment.

Make wide turns to avoid jack-knifing. Travel slowly and allow extra distance to stop. Do not tow on sloped ground. The weight of the towed equipment may cause loss of traction and loss of control.

Follow the manufacturer's recommendation for weight limits for towed equipment. Do not tow near ditches, canals, and other hazards.

IMPORTANT INFORMATION

The parking brake is not sufficient to lock the machine in place during transport. Ensure that the machine is well fastened to the transport vehicle. Always reverse the machine onto the transport vehicle to avoid tipping it over.

WARNING!

Escaping hydraulic oil under pressure can have sufficient force to penetrate the skin, causing serious injury. If injured by escaping fluid, see a doctor at once. Serious infection or reaction can develop if proper medical treatment is not administered immediately.

Rollover Protection System (ROPS)

The ROPS increases the basic weight of the unit by 73 lbs/33 kg.

- Do not use ROPS as a lifting, attaching or anchoring point.
- Do not use ROPS for wrecking or towing.
- Do not exceed Max GVW: 2822 lbs/1283 kg.
- Read machine's operator manual before each use.
- Securely fasten the seat belt if the unit has a ROPS.
- Where possible, avoid operating the unit near ditches, embankments and holes.
- Reduce speed when turning, crossing slopes and on rough, slick or muddy surfaces.
- Stay off slopes too steep for safe operation.
- Watch where you are going, especially at row ends, on roads and around trees.
- Do not permit others to ride.
- Operate the mower smoothly - no jerky turns, starts or stops.
- When mower is stopped, set brakes securely and use park brake.
- If any part of ROPS is damaged, the entire ROPS must be replaced.
- Check all bolts including seat belt for correct torque before each use.
- Check ROPS structure for damage before each use.
- ROPS bar is NOT intended for use in sub zero temperatures.

WARNING!

The rollover protection system's capabilities may be impaired by damage if the mower is overturned or if alteration to the ROPS occurs. If these conditions take place, the total structure MUST be replaced.

WARNING!

This mower is equipped with an internal combustion engine and should not be used on or near any unimproved forested, bush covered or grassy lands unless the engine's system is equipped with a spark arrester meeting applicable local or state laws (if any). If a spark arrestor is used, it should be maintained in effective working order by the operator.

Spark Arrestors

A spark arrester is standard equipment on the unit and is attached to the engine muffler. Clean the interior screen regularly, depending on usage and conditions.

To clean, remove the clamp securing the tail pipe. Remove the tail pipe and slide the spark arrestor screen out of the muffler. Clean carbon from the screen with a soft brush or cloth.

Replace screen and reattach the tail pipe, orienting the tail pipe either horizontally or upwards, away from grassy surfaces.

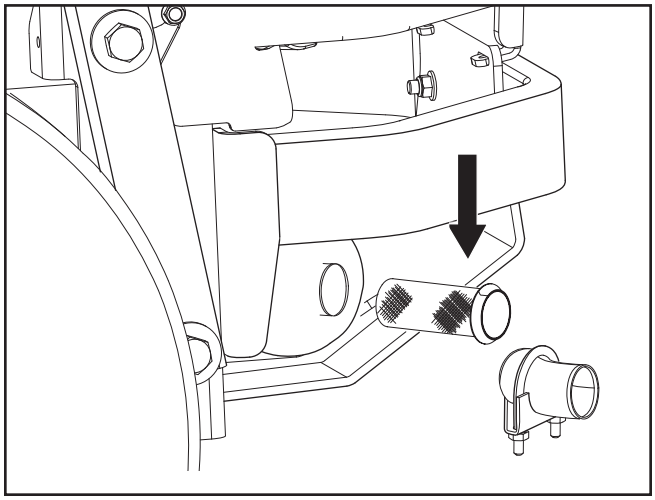

8011-514

Regularly clean spark arrestor screen

CONTROLS

This operator manual describes the Husqvarna Zero Turn Rider. The rider is fitted with a Kawasaki four-stroke overhead valve engine.

Transmission from the engine is made via belt-driven hydraulic pumps. Using the left and right steering controls, the flow is regulated and thereby the direction and speed.

Control Locations

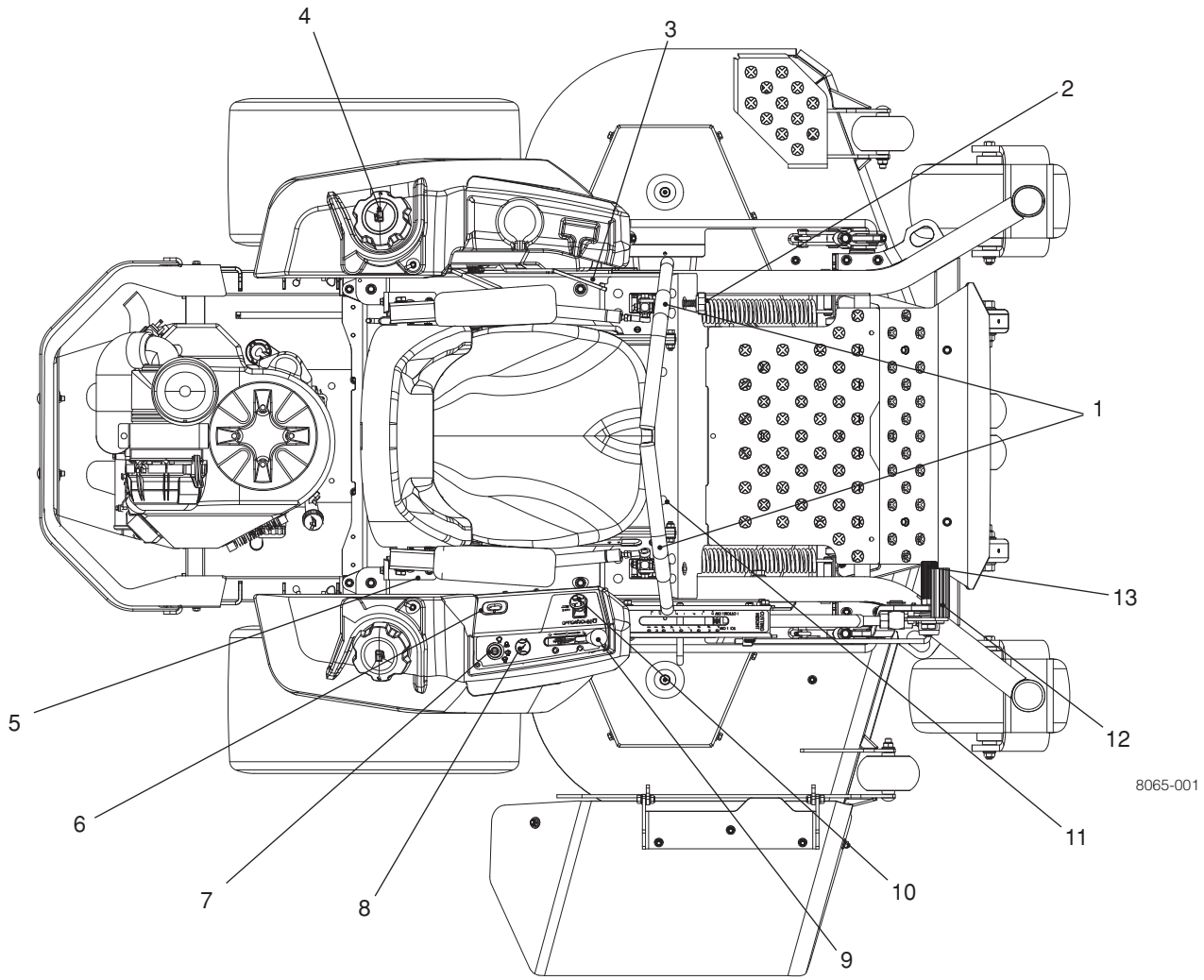

1. Motion control levers
2. Tracking knob
3. Parking brake
4. Fuel tank cap - left
5. Fuses
6. Hour meter
7. Ignition switch
8. Choke control
9. Throttle control
10. Blade switch
11. Seat adjustment lever
12. Deck lift
13. Deck release

Motion Control Levers

The machine's speed and direction are continuously variable using the two steering controls. The steering controls can be moved forward or backward about a neutral position. Furthermore, there is a neutral position, which is locked if the steering controls are moved outward.

When both controls are in the neutral position (N), the machine stands still.

By moving both controls an equal amount forward or backward, the machine moves in a straight line forward or backward respectively.

In order, for example, to turn right while moving forward, move the right control towards the neutral position. The rotation of the right wheel is reduced and the machine turns to the right.

Zero turn can be achieved by moving one control backward (behind the neutral position) and carefully moving the other steering control forward from its neutral position. The rotation direction when zero turning is determined by which steering control is moved backward behind the neutral position. If the left steering control is pulled backward, the machine turns to the left. Use extra care when using this maneuver.

If the steering controls are in uneven positions when standing still or do not fit in the slots for moving the controls outward, they can be adjusted.

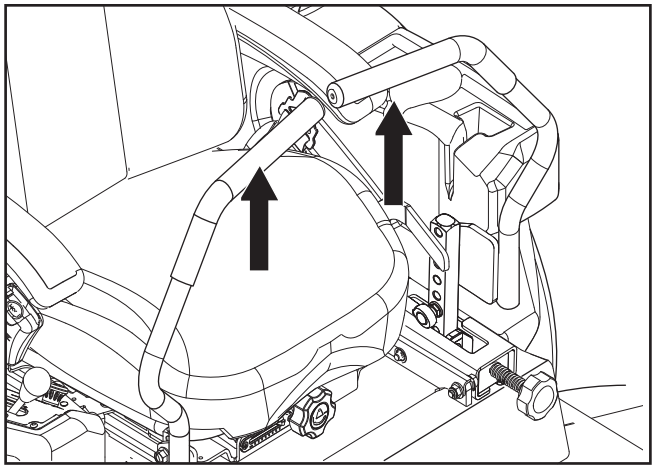

8065-003

Steering controls

WARNING!

The machine can turn very rapidly if one steering control is moved much further forward than the other.

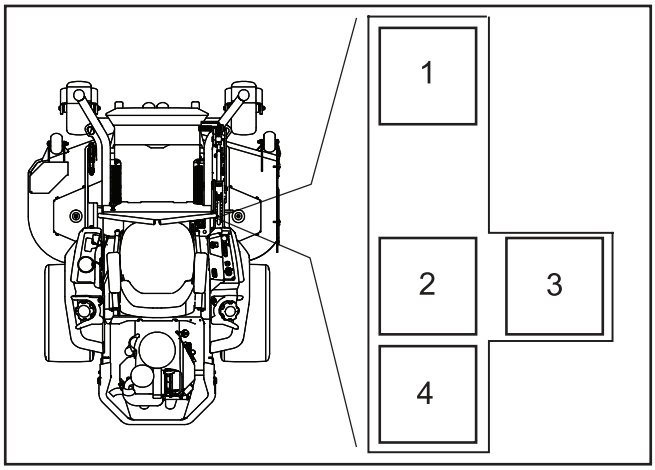

8065-053

1. Forward
2. Neutral
3. Neutral slot, Neutral lock
4. Reverse

Motion control lever pattern (right side)

Parking Brake

The parking brake is found on the left of the machine. Pull the lever backward to activate the brake and forward to release it.

IMPORTANT INFORMATION

The machine must stand absolutely still when applying the parking brake. Always set the parking brake before dismounting. Release the parking brake before moving the mower.

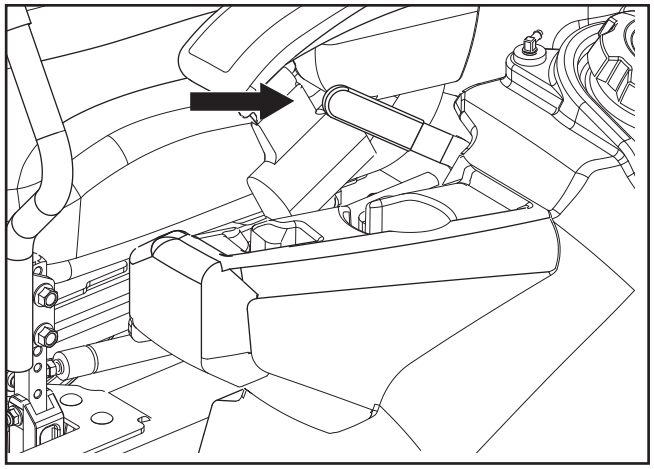

8065-006

Parking brake

Throttle Control

The throttle control regulates the engine speed and the rate of rotation of the blades, assuming the blade switch is pulled out,

To increase or decrease the engine speed, the control is moved forward or back respectively.

Avoid idling the engine for long periods, as there is a risk of fouling the spark plugs.

USE FULL THROTTLE WHEN MOWING, for best mower performance and battery charging.

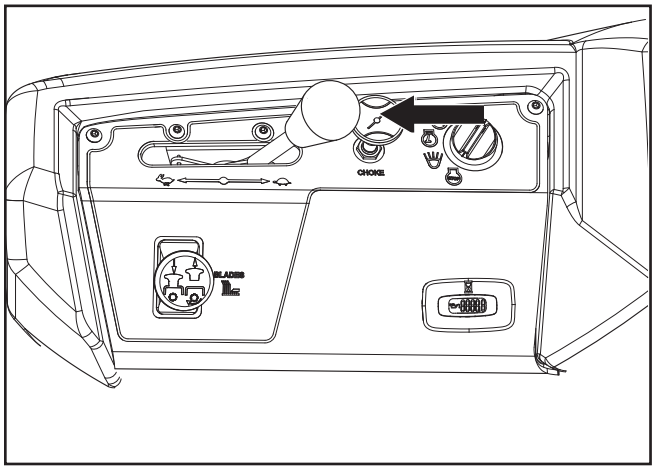

8065-004

Throttle control

Blade Switch

To engage the mower deck, pull the blade switch knob out. The mower blades are disengaged when the knob is pressed down.

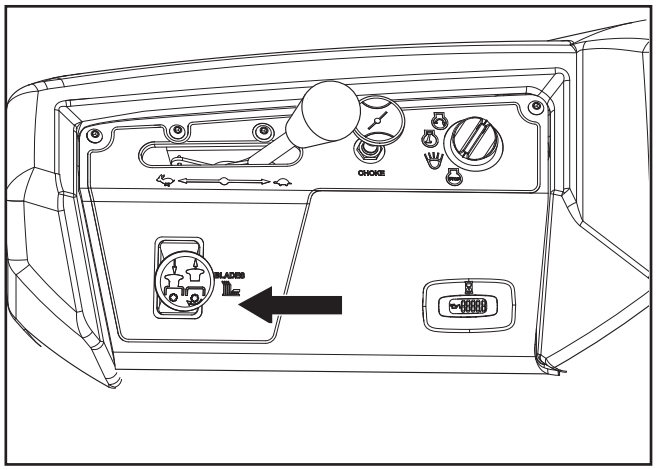

8065-004

Blade switch

Ignition Switch

The ignition key is placed on the control panel and is used to start and stop the engine. Turn the key clockwise to start the engine.

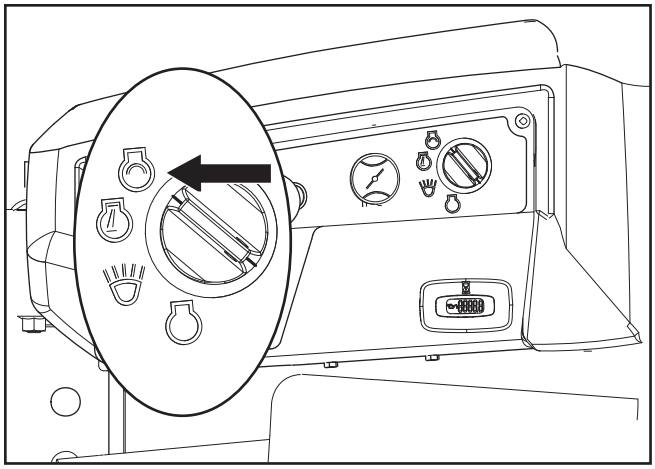

8065-058

Ignition switch

Release the key to the RUN position when the engine has started.

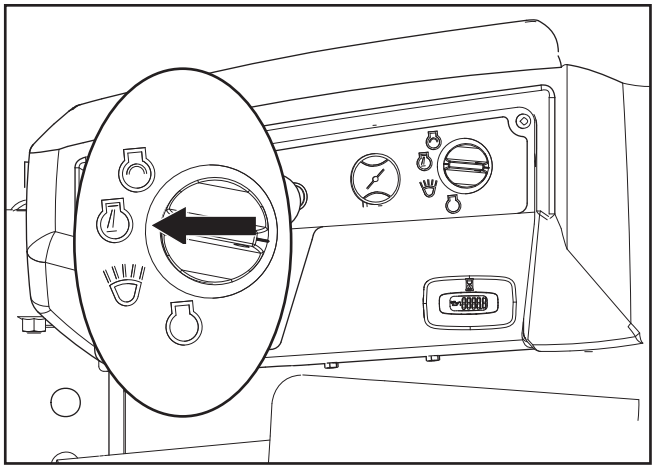

8065-059

Ignition switch - RUN position

For using ACCESSORY, turn the key clockwise.

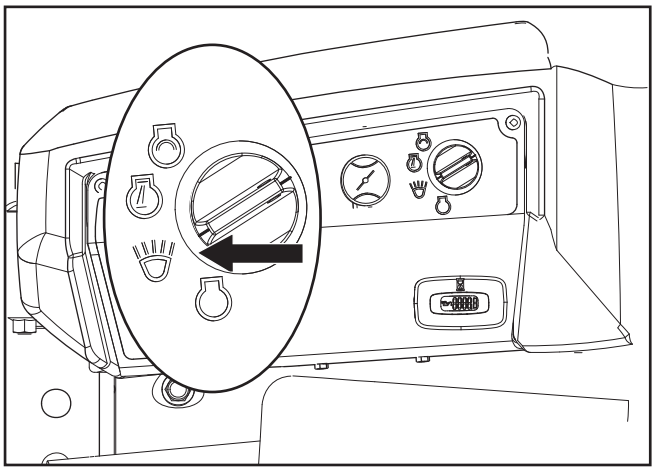

8065-057

Ignition switch - accessory

Choke Control

The choke control is used for cold starts in order to provide the engine with a richer fuel mixture.

For cold starts the control should be pulled up.

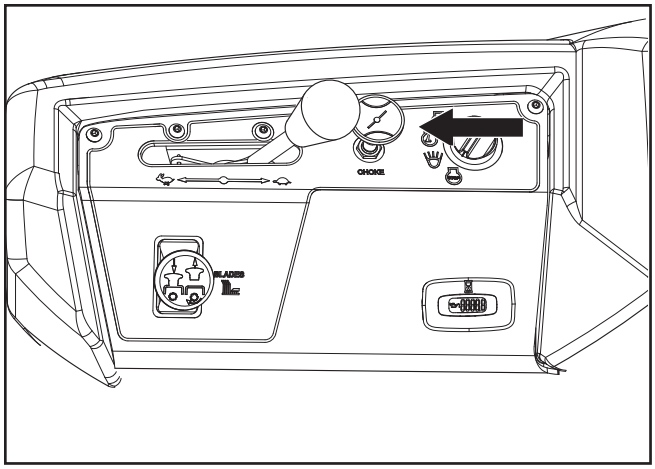

8065-004

Choke control

Fuses

Fuses are located on the right hand side of the machine. They are accessed by tilting the seat forward. Fuses are flat pin fuses type as used in automobiles.

There are three fuses with ratings and functions:

1. 20 A, Primary fuse.
2. 7.5 A, Mower deck coupling.
3. 10 A, Accessories

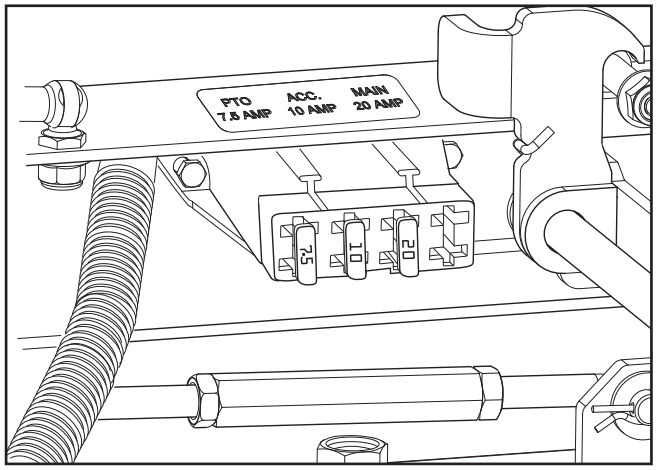

8065-043

Fuses

Hour Meter

The hour meter displays the total operating time with the blade activated, eliminating hours being added if the key was accidentally left on.

To view the operating hours, turn the key to the ON position and engage the blade switch. The clutch will engage and the hours should be shown on the meter.

The display on the hour meter will turn on the oil can icon after every fifty hours of use and will stay on for two hours or until the meter is manually reset.

To manually reset the timer, turn the ignition key to the RUN position and then engage and disengage the blade switch five times at one second intervals.

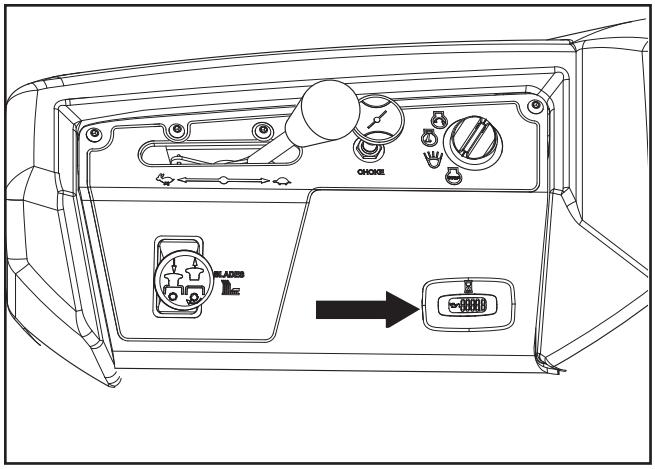

8065-004

Hour meter

Tracking Knob

If the mower is not tracking straight, check the air pressure in both rear tires. Recommended air pressure for the rear tires is 15 psi (1 bar).

1. Tracking adjustments are made using the tracking bolt and tracking knob. The tracking bolt and tracking knob act as limiting devices for the motion control levers when in the full-forward position.
2. For preliminary tracking adjustment, move unit to an open, unobstructed area such as an empty parking lot or open field.
3. Back the tracking bolt out until flush with nut.
4. Loosen tracking knob out until flush with nut.
5. Test operate unit by driving it at full throttle and the full forward position on both motion control levers. Gradually turn in the tracking bolt on the right hand side until the unit noticeably starts drifting right.
6. Drive forward at full throttle with both motion control levers in the full forward position. Gradually turn in the tracking knob (left side) until unit tracks straight.

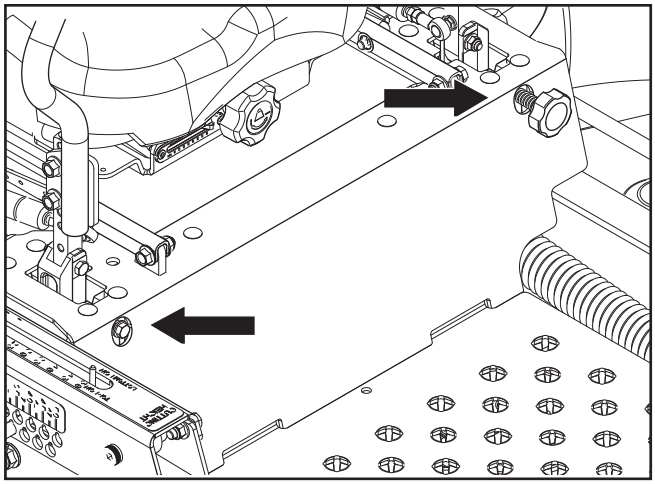

8065-060

Tracking adjustment

Cutting Height Pedals

The cutting height pedals release the deck lift to allow setting the desired deck height. Apply pressure to the lift pedal and rotate foot to also apply pressure to the release pedal, unlocking the deck lift.

For transport, push the lift pedal fully forward until the deck lift latches in the transport (highest) position.

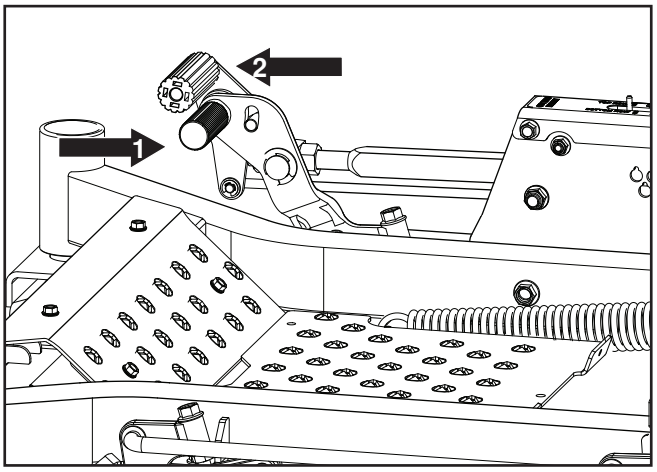

8065-017

1. Lift pedal
2. Release pedal

Cut height selection pedals

Seat Adjustment Lever

The seat can be adjusted lengthways. The lever is located at the right side of the seat (as seen by the driver in the seat). When making adjustments the lever is moved to the left or upward depending on model.

IMPORTANT INFORMATION

Seat should not be adjusted while unit is in motion.

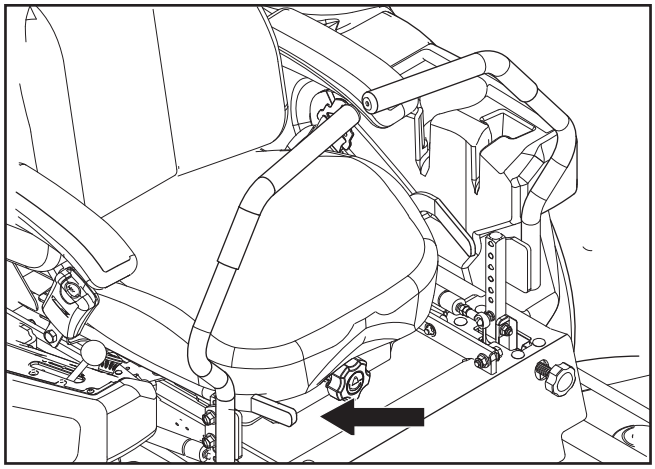

8065-009

Lengthways adjustment

Fuel Shut Off Valve

The fuel shut off valve is located at the right rear of the seat. The valve has three positions: right tank, left tank and OFF.

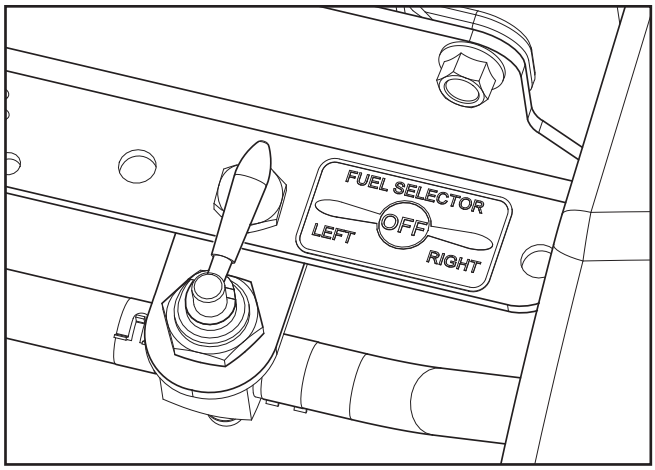

8065-099

Fuel shut off valve in the CLOSED position.

Fuel Tank

IMPORTANT INFORMATION

It is recommended that fuel be added to both tanks on initial start up.

Read the safety instructions before refueling. The machine has two fuel tanks, one on each side just behind the seat. The capacity for each tank is 5.5 gallons (20.5 liters).

Regularly check the gas cap gasket for damage and keep the cap properly tightened.

The engine will run on a minimum of 87-octane unleaded gasoline (no oil mix). Environmentally adapted alkylate gasoline can be used. See *Technical Data* concerning ethanol fuel. Methanol fuel is not allowed. Do not use E85 alcohol based fuel. Damage to the engine and components may occur.

When operating in temperatures below 32° F. (0° C.), use fresh, clean winter grade gasoline to help insure good cold weather starting.

WARNING!

Gasoline is highly flammable. Observe caution and fill the tank outdoors (see the *Safety* section).

WARNING!

The engine and the exhaust system become very hot during operation.

Risk for burns if touched.

Allow engine and exhaust system to cool before refueling.

WARNING!

Fill to bottom of filler neck. Do not overfill. Wipe off any spilled oil or fuel. Do not store, spill or use gasoline near an open flame.

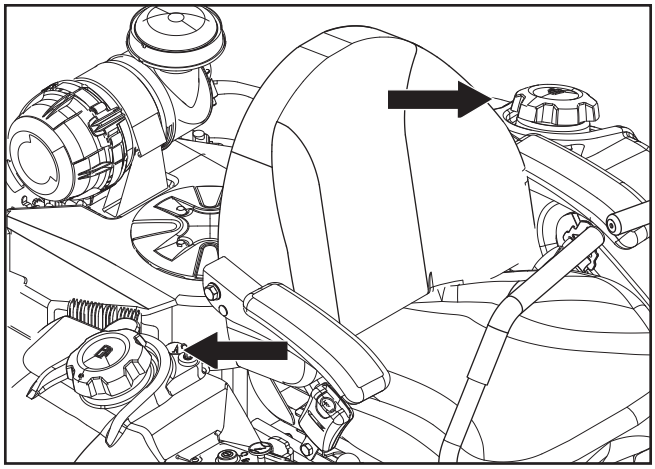

8065-007

Gasoline fuel tanks

IMPORTANT INFORMATION

Experience indicates that alcohol blended fuels (called gasohol, ethanol or methanol) can attract moisture which leads to separation and formation of acids during storage. Acidic gas can damage the fuel system of an engine while in storage. To avoid engine problems, the fuel system should be emptied before storage of 30 days or longer. Drain the gas tank, start the engine and let it run until the fuel lines and carburetor are empty. Use fresh fuel the next season. See Storage Instructions for additional information. Never use engine or carburetor cleaners in the fuel tank or permanent damage may occur.

Read the ***Safety Instructions*** section and the following pages if you are unfamiliar with the machine.

Training

Due to unique steering capabilities, zero turn mowers are far more maneuverable than typical riding mowers.

This section should be reviewed in its entirety prior to attempting to move the mower under its own power. When first operating the mower or until becoming comfortable with controls, use a reduced throttle speed and reduced ground speed. DO NOT move control levers to the furthest forward or reverse positions during initial operation.

First time users should become familiar with the mower's movement on a hard surface, such as concrete or blacktop PRIOR to attempting to operate on turf. Until the operator becomes comfortable with the mower controls and zero turning capability, overly aggressive maneuvers may damage turf.

Steering

To move forward and backward

The direction and speed of the mower's movements is effected by the movement of the control lever(s) on each side of mower. The left control lever controls the left wheel. The right control lever controls the right wheel.

First time users should push mower (see ***Moving Machine By Hand*** in the *Operation* section) to an open, flat area, without other people or vehicles or obstacles nearby. To move unit under its own power, the operator must be in the seat, start engine (see *Before Starting* in the *Operation* section), adjust engine speed to idle, disengage parking brake, do not engage blades at this time, rotate control levers inward. As long as the control levers have not been moved forward or backwards, mower will not move. Slowly move both control levers forward slightly. This will allow mower to start moving forward in a straight line. Pull back on control levers to the neutral position and mower should stop moving. Pull back slightly on control levers, this will allow mower to start moving backwards. Push forward on control levers to the neutral position and mower should stop moving.

To turn to the right

While moving in a forward direction, pull the right lever back towards the neutral position while maintaining the position of the left lever, this will slow the rotation of the right wheel and cause the machine to turn in that direction.

To turn to the left

While moving in a forward direction pull the left lever back towards the neutral position while maintaining the position of the right lever, this will slow the rotation of the left wheel and cause the machine to turn in that direction.

To zero turn

While moving in a forward direction, first pull both control levers back until the mower stops or slows dramatically.

Then by alternating one lever slightly to the forward position and the other in the reverse position, complete the turn.

Roll Bar and Safety Belt

Operate the unit with the roll bar in the raised and locked position and use the seat belt. There is no rollover protection when the roll bar is down. If it is necessary to lower roll bar, do not wear the seat belt. Raise the roll bar as soon as clearance permits.

WARNING!

The seat belt must be used when the roll bar is in upright position.

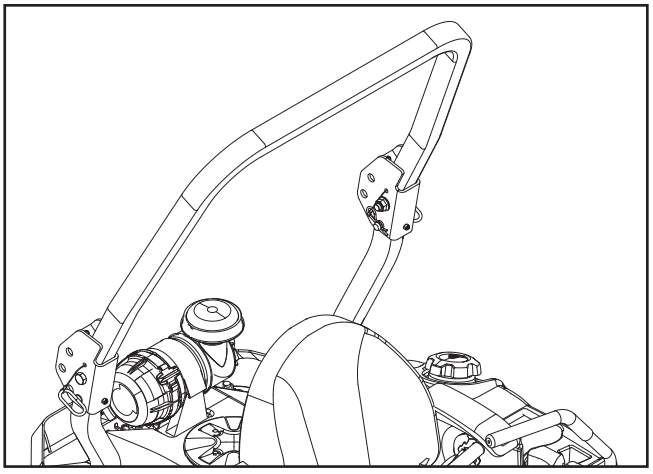

8065-011

Roll bar in upright position

Before Starting

1. Read the sections on *Safety* and *Controls* before starting the machine.
2. Perform the daily maintenance before starting (see ***Maintenance Schedule*** in the *Maintenance* section).
3. Check that there is sufficient fuel in the fuel tank.
4. Make sure that the parking brake is engaged.

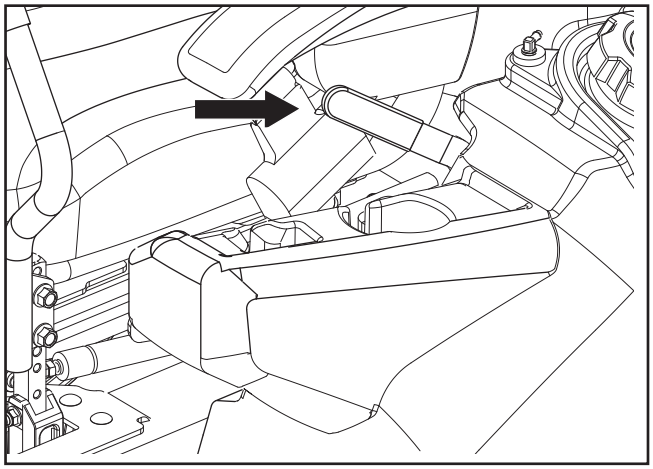

8065-006

Activate parking brake before starting

5. Adjust the seat to the desired position.
6. Place the steering controls in the neutral position.

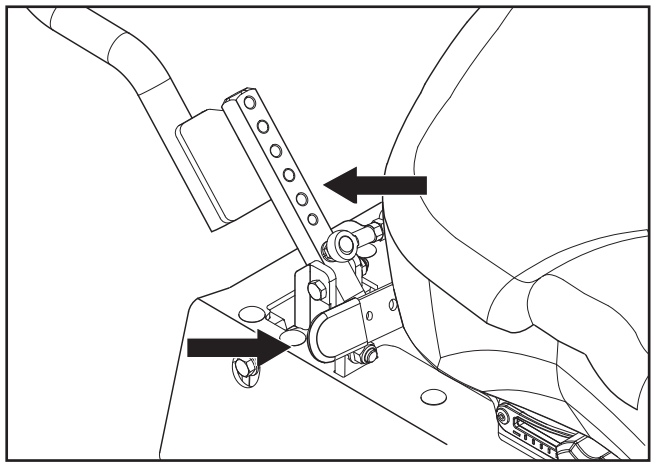

8065-018

Place controls in neutral position

7. Push foot pedal fully forward for transport position. Set pin at desired cutting height. (Height selection pin is removed by rotating 180°.) Make sure that the pin is inserted fully through the both sides of the height panels.

The following conditions must be fulfilled before the engine can be started:

- The blade switch for engaging the mower blades must be depressed.
- The parking brake must be on.
- Both steering controls must be in the locked (outer) neutral position.

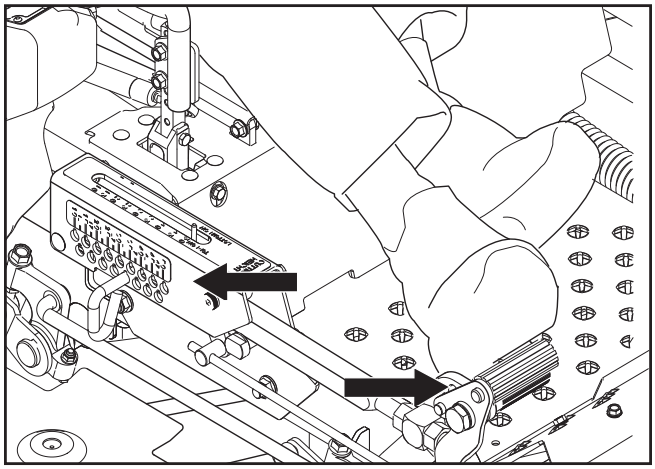

8065-016

Set deck to selected cutting height

Starting the Engine

1. Sit on the seat.
2. Raise the mower deck to the transport position by setting the lift pedals fully forward.
3. Activate the parking brake.

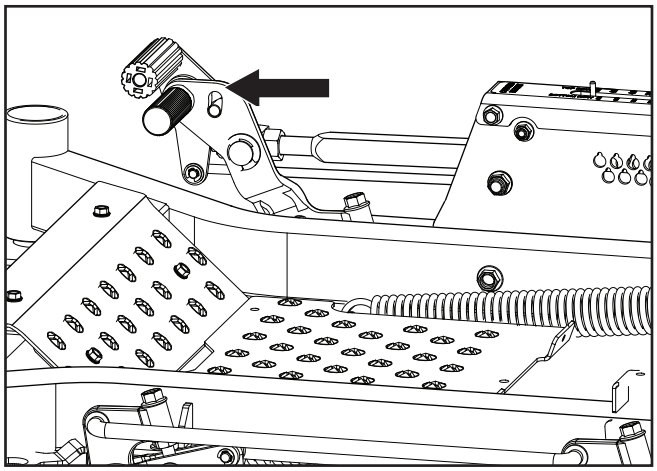

8065-017

Set mower deck to the transport position

4. Disengage the mower blades by pressing the blade switch downwards.

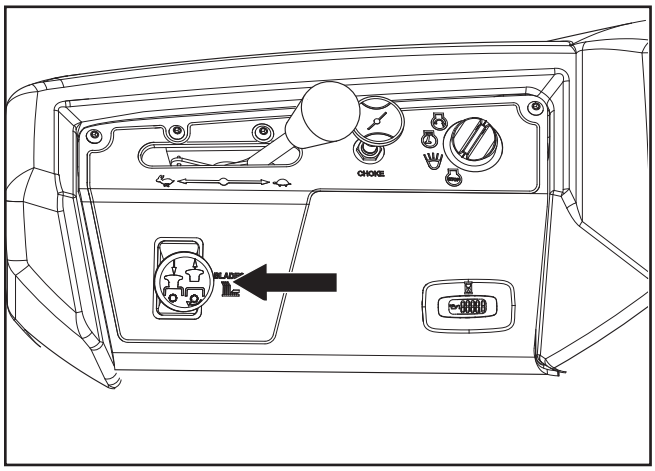

8065-004

Press the control for disengaging the mower deck

5. Move the steering controls outward to the locked (outer) neutral position.

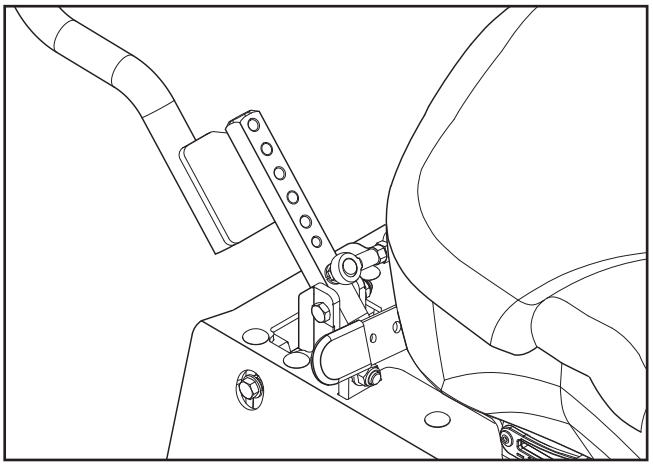

8065-018

Place controls in neutral position

6. Move the throttle to the middle position.

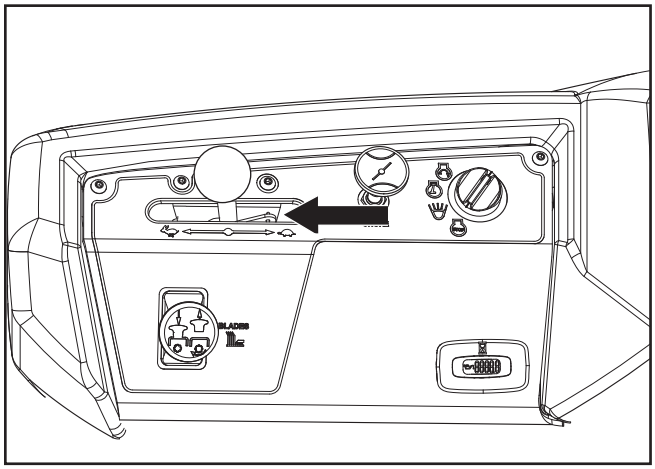

8065-019

Set the throttle

7. If the engine is cold, the choke control should be pulled up.

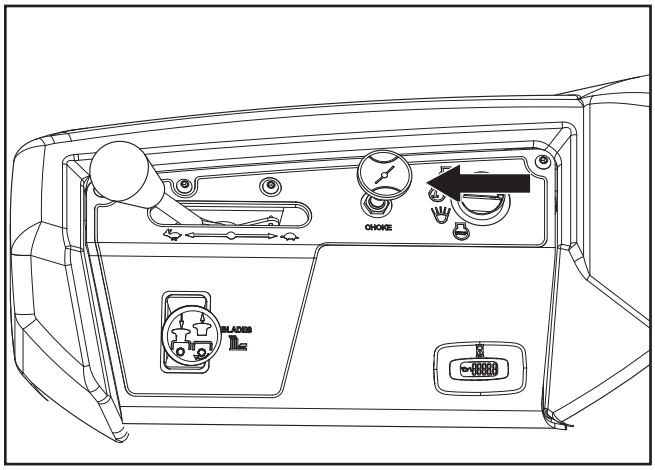

8065-015

Set the choke control

8. Open the fuel tank valve for the selected tank.

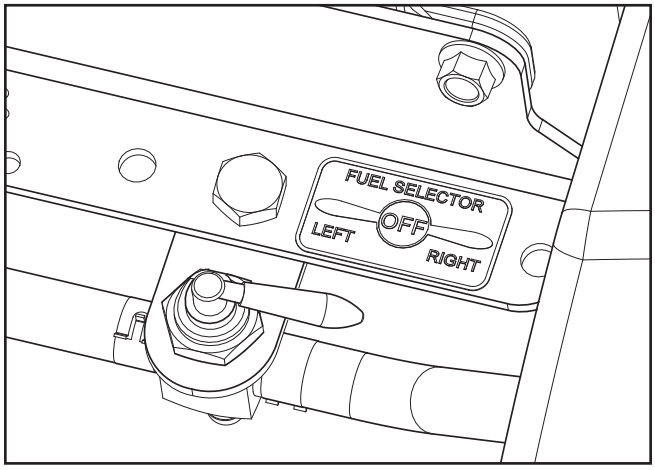

8065-103

Fuel valve in the OPEN position

9. Press in and turn the ignition key to the start position.

IMPORTANT INFORMATION

Do not run the starter for more than 5 seconds each time. If the engine does not start, wait about 10 seconds before retrying.

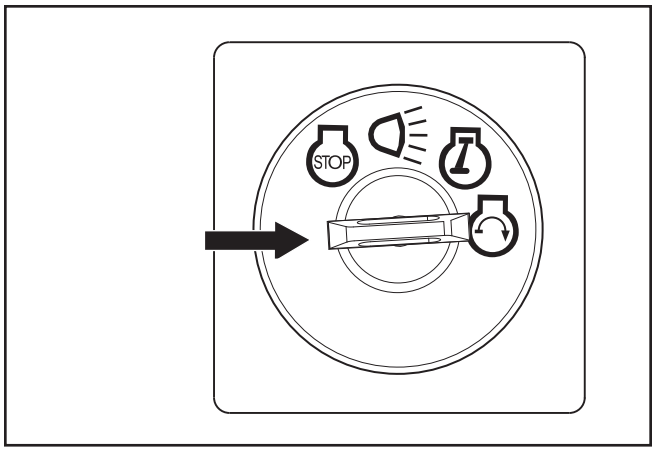

8050-780

Turn to the start position

10. When the engine starts, immediately release the ignition key back to the run position. Push the choke control in gradually when the engine has started.

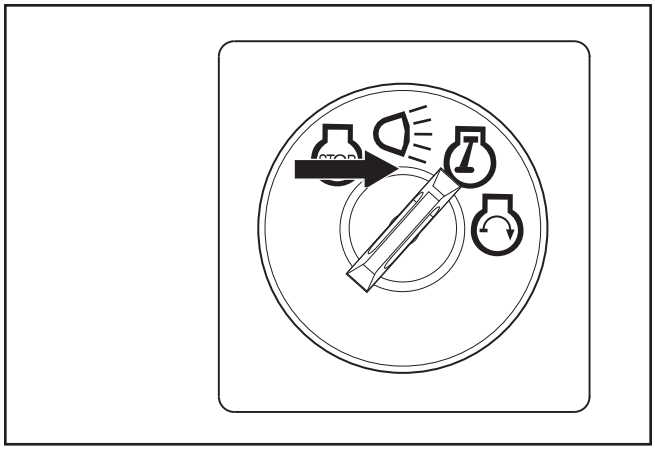

8050-781

Return to run position

11. Set the engine speed with the throttle. Allow the engine to run at a moderate speed, approximately mid throttle, for 3-5 minutes before loading it too heavily. **USE FULL THROTTLE WHEN MOWING** (no choke).

WARNING!

Engine exhaust and certain vehicle components contain or emit chemicals considered to cause cancer, birth defects or other reproductive system damage. The engine exhaust contains carbon monoxide, which is an odorless, colorless, poisonous gas. Do not use the machine in enclosed spaces.

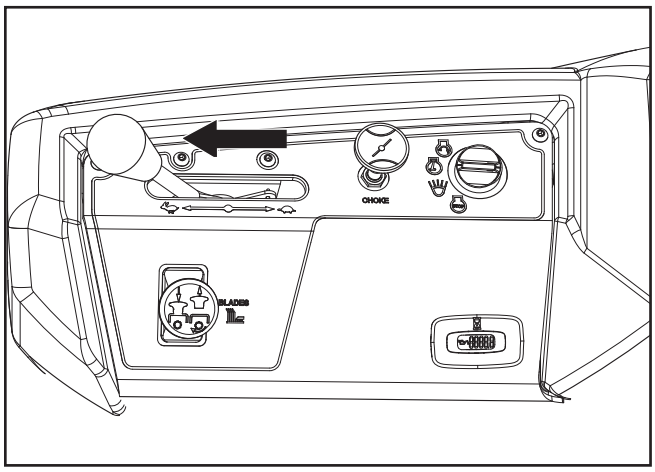

8065-015

Set the engine speed

Weak Battery

WARNING!

Lead-acid batteries generate explosive gases. Keep sparks, flame and smoking materials away from batteries. Always wear eye protection when around batteries.

IMPORTANT INFORMATION

The mower is equipped with a 12-volt negative grounded system. The other vehicle must also be a 12-volt negative grounded system. Do not use the mower to start other vehicles.

If the battery is too weak to start the engine, it should be recharged. (See ***Battery*** in the *Maintenance* section.)

Jumper Cables Use

1. Connect each end of the RED cable to the POSITIVE (+) terminal on each battery, taking care not to short against chassis.
2. Connect one end of the BLACK cable to the NEGATIVE (-) terminal of the fully charged battery.
3. Connect the other end of the BLACK cable to a good CHASSIS GROUND on the mower with the discharged battery, away from the fuel tank and battery.

To remove cables, reverse order

4. Remove BLACK cable first from chassis and then from the fully charged battery.
5. Remove RED cable last from both batteries.

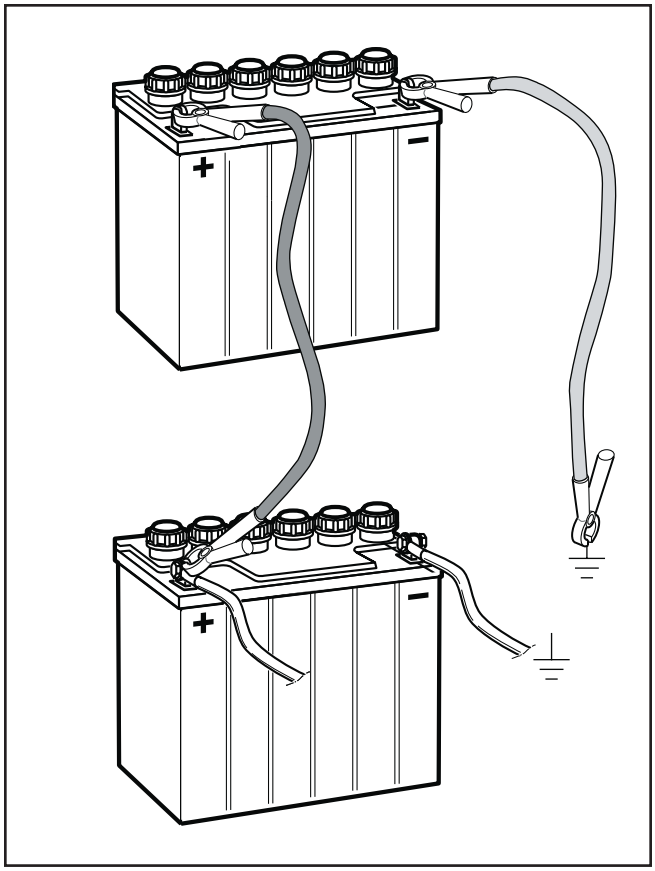

8011-642

Jumper cable connection

Running

1. Release the parking brake by moving the lever downward.
   NOTE: The mower is equipped with an operator presence system. When the engine is running, any attempt by the operator to leave the seat without first setting the parking brake will shut off the engine.
2. Move the steering controls inwards, out of the neutral position (N).

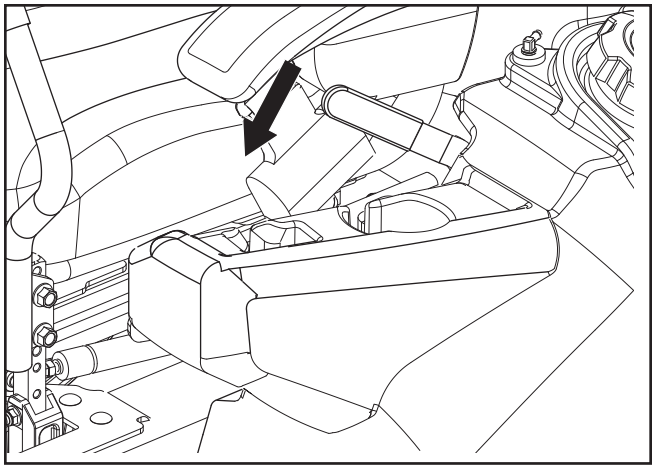

8065-006

Release the parking brake

3. Release deck height control by applying equal pressure to both pedals. Push pedals again to lower deck to selected setting.

WARNING!

Make sure that no one is near mower when engaging blade switch.

Make sure the work area is free from objects that could be thrown by the rotating blades.

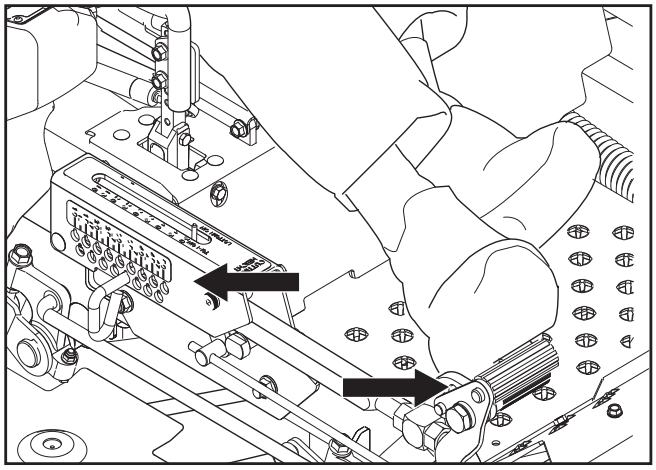

8065-016

Set deck to selected cutting height

4. Move throttle control to full throttle.
5. Engage the mower deck by pulling out the blade switch.

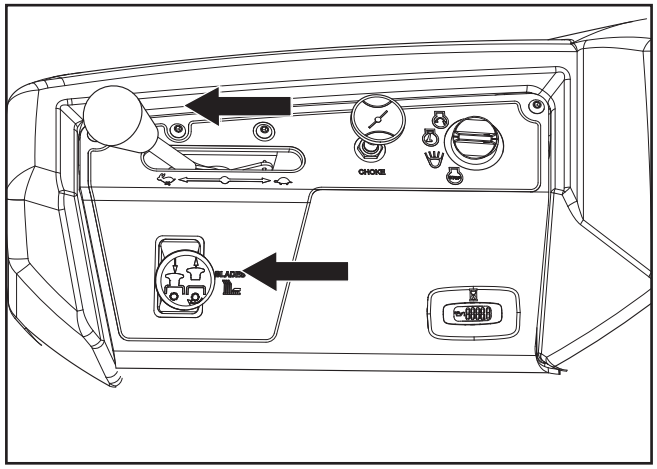

8065-015

Engage the mower deck and move throttle to full.

Operating on Hills

Read the Safety Instructions ***Driving on Slopes*** in the *Safety Instructions*.

WARNING!

Do not drive up or down hills with slopes greater than 10 degrees. Do not drive across slopes.

- The slowest speed possible should be used before starting up or down hills.
- Avoid stopping or changing speed on hills.
- If stopping is absolutely necessary, pull drive levers into the neutral position and push to the outside of the unit and engage the parking brake.
- To restart movement, release the parking brake.
- Pull the control levers back to the center of the mower and press forward to regain forward motion.
- Make all turns slowly.

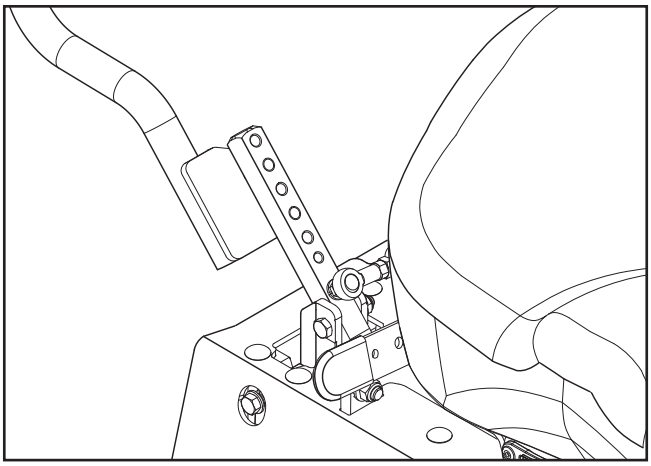

8065-018

Place controls in neutral position

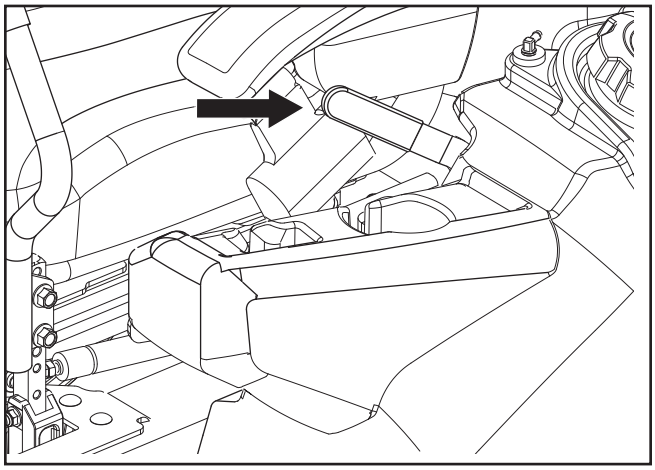

8065-006

Release the parking brake

Mowing Tips

- Observe and flag rocks and other fixed objects to avoid collisions.
- Begin with a high cutting height and reduce it until the desired mowing result is attained. The average lawn should be cut to 2½" (64 mm) during the cool season and over 3" (76 mm) during the hot months. For healthier and better looking lawns, mow often after moderate growth.
- For best cutting performance, grass over 6" (15 cm) in height should be mowed twice. Make the first cut relatively high; the second to the desired height.
- The mowing result will be best with a high engine speed (the blades rotate rapidly) and low speed (the rider moves slowly). If the grass is not too long and dense, the driving speed can be increased without negatively affecting the mowing result.
- The finest lawns are obtained by mowing often. The lawn becomes more even and the grass clippings more evenly distributed over the mown area. The total time taken is not increased as a higher operating speed can be used without poor mowing results.
- Avoid mowing wet lawns. The mowing result is poorer because the wheels sink into the soft lawn, clumps build, and the grass clippings fasten under the cowling.
- Hose the mower deck underside with water after each use. When cleaning, the mower deck shall be raised into the transport position. Make sure the mower is cooled and the engine is off.
- Use compressed air to clean top surface of the deck. Avoid flooding water on top surface, engine and electrical components.
- When the mulching kit is used, it is important that the mowing interval is frequent and that the deck is cleaned more often.

WARNING!

Clear the lawn of stones and other objects that can be thrown out by the blades.

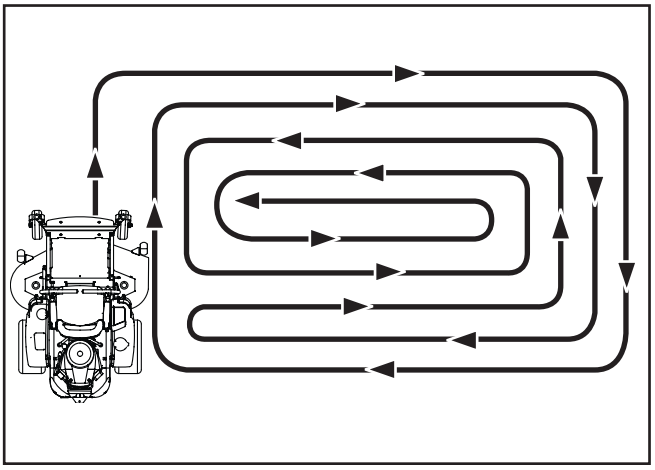

8011-603b

Mowing pattern

WARNING!

Never drive the rider on terrain that slopes more than 10 degrees. Mow slopes up and down, never side to side. Avoid sudden directional changes.

Stopping the Engine

1. Move the throttle to the minimum position (tortoise symbol).pressing the blade switch.
2. Move the steering controls outward to the neutral position.
3. Disengage the mower deck by depressing the blade switch.

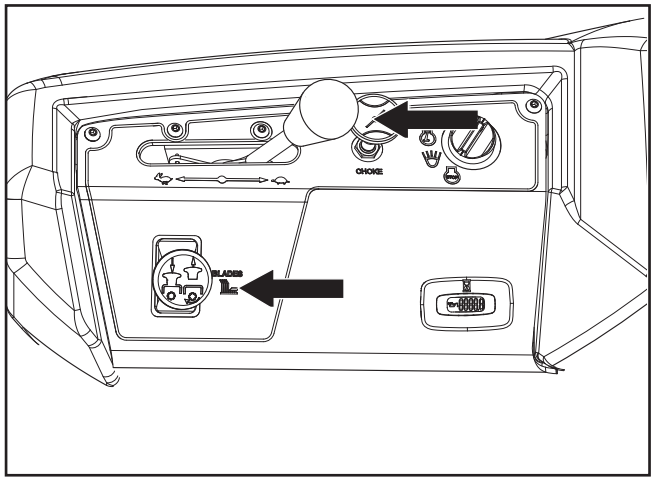

8065-004

Disengage the mower deck and move throttle to minimum

4. Raise the mower deck by pressing the foot pedal forward to the transport position.
5. When the machine is standing still, activate the parking brake by pulling the lever upward.

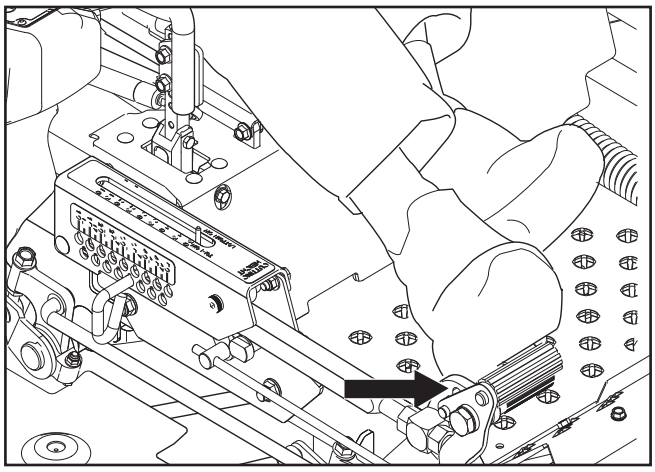

8065-016

Raise deck to transport position

6. Turn the ignition key to the stop position. If the engine has been worked hard, allow it to idle a minute in order to attain a normal operating temperature before stopping. To prevent fouling the spark plugs, avoid idling the engine for longer periods.
7. Remove key. To prevent unauthorized use, always remove key when leaving the mower.

IMPORTANT INFORMATION

Leaving the ignition switch in any other position than OFF will cause the battery to be discharged.

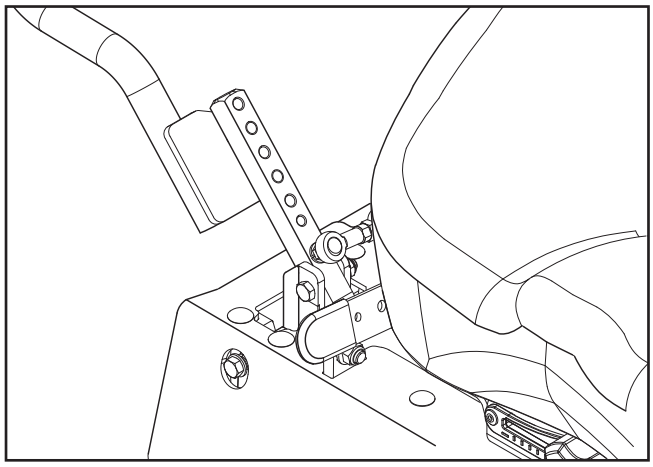

8065-018

Place controls in neutral position to stop

Moving Machine By Hand

Bypass Valves

Bypass valves are used to release the system so the machine may be moved by hand when not running.

IMPORTANT INFORMATION

Tighten the valve moderately.

Do not overtighten the valve when closing. That can damage the valve seat.

Hydro Pumps

Pump release valves are located at the front and rear of the pump. Tilt the seat forward and remove the fan cover to gain access to the pump.

Use a 5/8" wrench or socket and ratchet. Turn the pump release valve ½ turn. Reverse the procedure to reset the pump.

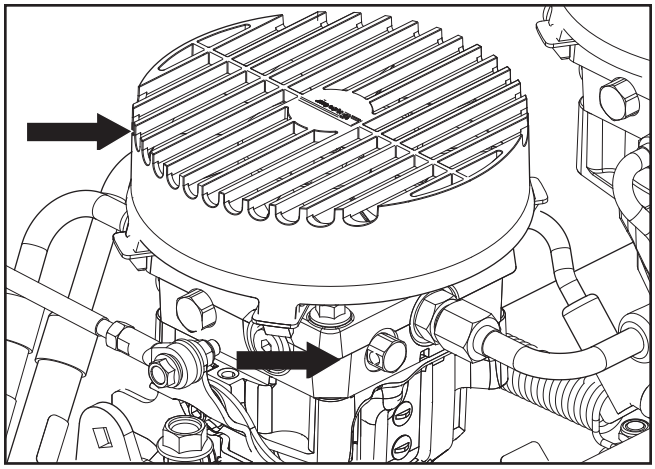

8065-061

Remove fan cover to access release valves

WARNING!

No adjustments or maintenance should be carried out unless:

- **the engine stopped**
- **the ignition key removed**
- **the parking brake activated**

MAINTENANCE

MAINTENANCE	Daily		At least once each year	Maintenance interval in hours		
	Before	After		50	250	500
Check the parking brake	●					
Check the engine's oil level (every refueling)	■					
Check the safety system	●					
Check for fuel and oil leakages	♦					
Check/clean the engine's cooling air intake		■				
Check the mower deck		●				
Check for loose hardware (screws, nuts)		●				
Clean under the mower deck		●		●	●	●
Start the engine and blades, listen for unusual sounds		♦				
Check for damage		♦		♦	♦	♦
Thoroughly clean around the engine		♦		♦	♦	♦
Clean around belts, belt pulleys		♦		♦	♦	♦
Check the tire pressures		●		●	●	●
Check battery connections			●	●	●	●
Sharpen[3]/ Replace mower blades			●	●	●	●
Clean the engine's cooling air intake [2]			■	■	■	■
Clean the air cleaner's foam pre-filter [2]			■		■	
Clean the air cleaner's paper filter cartridge [2]			■		■	
Check/adjust the parking brake			●	●	●	●
Inspect muffler/spark arrester			♦	♦	♦	♦

[1] First change after 8-10 hours. When operating with a heavy load or at high ambient temperatures, replace every 50 hours.

[2] In dusty conditions, cleaning and replacement are required more often.

[3] Performed by authorized service workshop.

● = Described in this manual

♦ = Not described in this manual

■ = Refer to the engine manufacturer's manual

MAINTENANCE

MAINTENANCE	Daily		At least once each year	Maintenance interval in hours		
	Before	After		50	250	500
Check/adjust throttle cable					■	
Check the condition of belts, belt pulleys			●		●	
Change the engine oil [1]			■	■		
Replace the engine oil filter			■		■	
Clean/replace the spark plugs			●		■	
Replace the fuel filter			●		●	
Replace air paper filter [2]			■		■	
Check the caster wheels (every 200 hours)			●		●	
Replace the air cleaner's foam pre-filter [2]			■			
Check the hydraulic oil in the oil tank		●				
Change the hydraulic oil (every 500 hours)			●			●
Replace the hydraulic oil filter (every 500 hours)			●			●
Dismantle and inspect starter [3] (every 500 hours)						♦
Check/adjust the mower deck			●			●
Check the engine valve clearance [3]			♦			♦
Perform the 500-hour service [3]			♦			♦

[1] First change after 8-10 hours. When operating with a heavy load or at high ambient temperatures, replace every 50 hours.

[2] In dusty conditions, cleaning and replacement are required more often.

[3] Performed by authorized service workshop.

● = Described in this manual

♦ = Not described in this manual

■ = Refer to the engine manufacturer's manual

WARNING!

Before performing any service or adjustment checklist:

- **Engage the parking brake.**
- **Place the Blade-switch in the disengaged position.**
- **Turn the ignition switch to OFF position and remove the key.**
- **Make sure the blades and all moving parts have completely stopped.**

Battery

The mower is equipped with a maintenance free battery and does not need servicing. However, periodic charging of the battery with an automotive type battery charger will extend its life.

- Keep battery and terminals clean.
- Keep battery bolts tight.
- See chart for charging times.

STANDARD BATTERY	STATE OF CHARGE	APPROXIMATE BATTERY CHARGING TIME* TO FULL CHARGE AT 80°F / 27°C			
		Maximum Rate at:			
		50 Amps	30 Amps	20 Amps	10 Amps
12.6V	100%	– FULL CHARGE –			
12.4V	75%	20 min.	35 min.	48 min.	90 min.
12.2V	50%	45 min.	75 min.	95 min.	180 min.
12.0V	25%	65 min.	115 min.	145 min.	280 min.
11.8V	0%	85 min.	150 min.	195 min.	370 min.

*Charging time depends on battery capacity, condition, age, temperature and efficiency of charger

WARNING!

Always wear eye protection when around batteries.

IMPORTANT INFORMATION

Do not attempt to open or remove caps or covers. Adding or checking level of electrolyte is not necessary.

Always use two wrenches for the terminal screws.

Battery Removal

Corrosion and dirt on the battery and terminals can cause the battery to “leak” power.

1. Lift the seat and rotate fully forward until supported by the seat rod.
2. Loosen the two wingnuts attached to the side “J” bolts just enough that the battery mount bracket slides down off the battery.
3. Using two ½" wrenches disconnect BLACK battery cable then RED battery cable.
4. Carefully remove the battery from the mower.

WARNING!

Do not short battery terminals by allowing a wrench or any other object to contact both terminals at the same time. Before connecting battery, remove metal bracelets, wristwatch bands, rings, etc.

Positive terminal must be connected first to prevent sparks from accidental grounding.

For cleaning

5. Rinse the battery with plain water and dry.
6. Clean terminals and battery cable ends with wire brush until shiny.

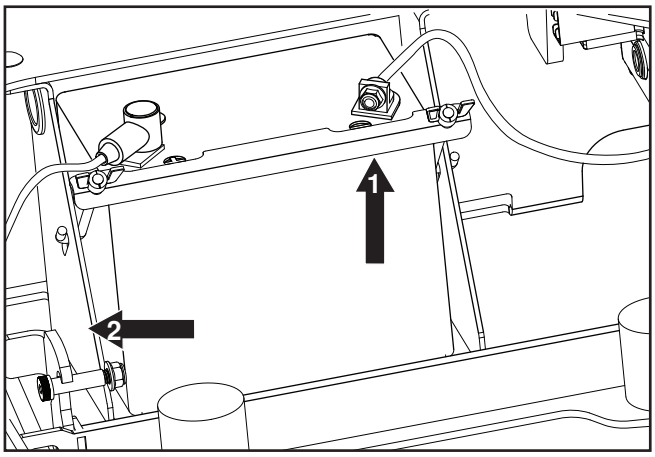

8065-020

1. Mount bracket
2. Battery bracket

Battery cleaning and installation

For replacing

7. Install new battery with terminals in the same position as the old battery.
8. Connect RED battery cable first to positive (+) battery terminal.
9. Connect BLACK grounding cable to negative (-) battery terminal.
10. Slide mount bracket back up over battery and retighten wingnuts.
11. Lower seat.

Safety System

This machine is equipped with a safety system that prevents starting or driving under the following conditions.

The engine can only be started when:

1. The mower deck is disengaged.
2. The steering controls are in the outer, locked neutral position.
3. The parking brake is on.

Make daily inspections to ensure that the safety system works by attempting to start the engine when one of the conditions is not met. Change the conditions and try again.

If the machine starts when one of these conditions is not met, turn the machine off and repair the safety system before using the machine again.

Make sure the engine stops when the park brake is not engaged and the operator leaves the seated position.

Check that the engine stops if the mower blades are engaged and the driver temporarily moves off the driver's seat.

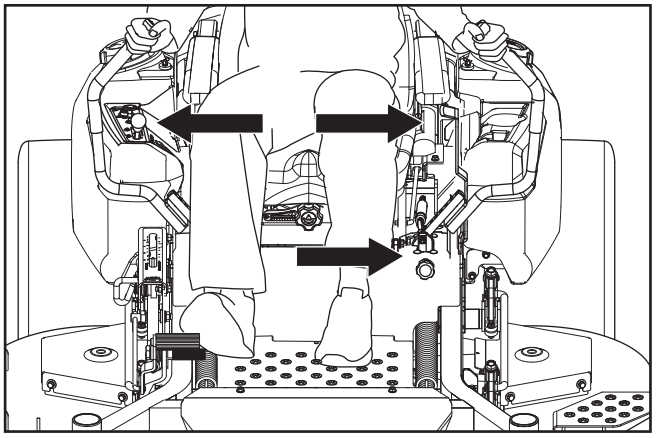

8065-021

Conditions for starting

IMPORTANT INFORMATION

To be able to drive, the driver must sit in the seat and release the parking brake before the steering controls can be moved into the neutral position, otherwise the engine will stop.

Fuel Filter

Replace the line-mounted fuel filter every 100 hours (once per season) or more often if it becomes clogged.

1. Move the hose clamps away from the filter. Use flat-nosed pliers.
2. Pull the filter loose from the hose ends.
3. Push the new filter into the hose ends. Position the filter with the FLOW arrow pointing toward the fuel pump. If necessary, a soap solution can be applied to the filter ends to ease mounting.
4. Move the hose clamps back toward the filter.

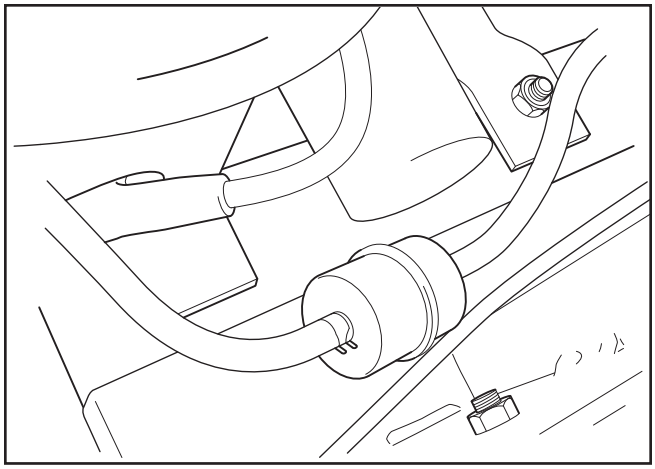

8065-026

Fuel filter

Tire Pressures

Fill tire pressures to 15 psi / 103 kPa / 1 bar.

IMPORTANT INFORMATION

DO NOT add any type of tire liner or foam fill material to the drive tires. Excessive loads created by foam filled tires will cause premature failures.

Only use O.E.M. specified tires.

Parking Brake

Visually check that no damage is found on the lever, links, or switch belonging to the parking brake. Perform a standstill test and check that there is sufficient braking action.

WARNING!

Faulty adjustment result in reduced braking ability and can cause an accident.

IMPORTANT INFORMATION

The machine must be standing still when applying the parking brake.

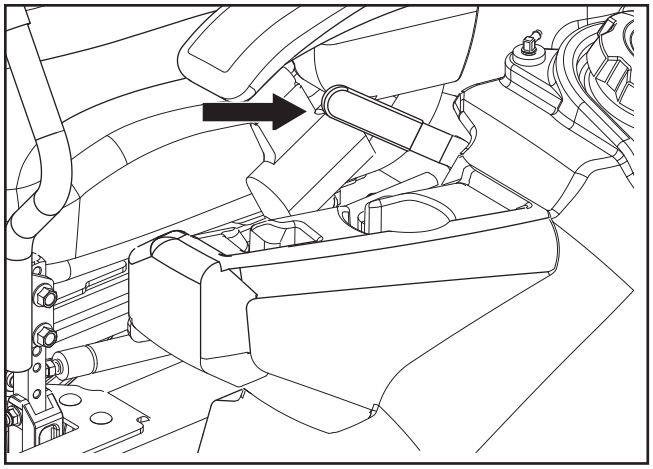

8065-006

Parking brake

Parking Brake Adjustments

1. Using a jack stand, raise the rear of the mower up off the ground. Make sure the machine is securely supported.
2. Remove the rear tire assemblies.
3. Release the park brake.
4. Measure the distance from the swivel to the washer. (See Illustration). The measurement should be 1¾" on both the right and left side brake linkage assemblies.

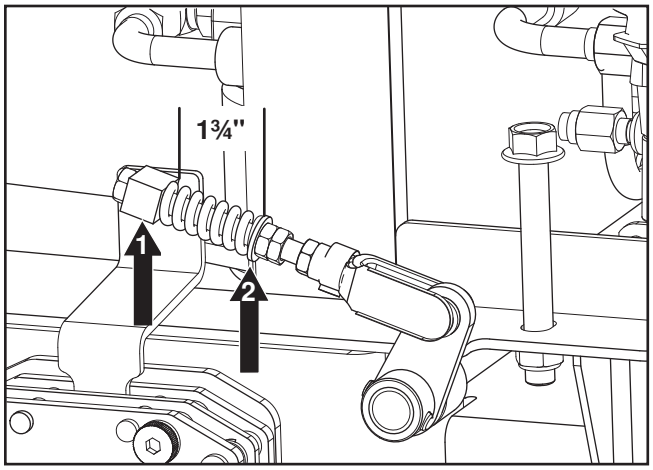

8065-051

1. Swivel
2. Washer

Parking brake adjustment

5. If adjustments are needed, loosen B jam nut and turn A jam nut until the correct distance is achieved. Retighten B jam nuts against A jam nuts.

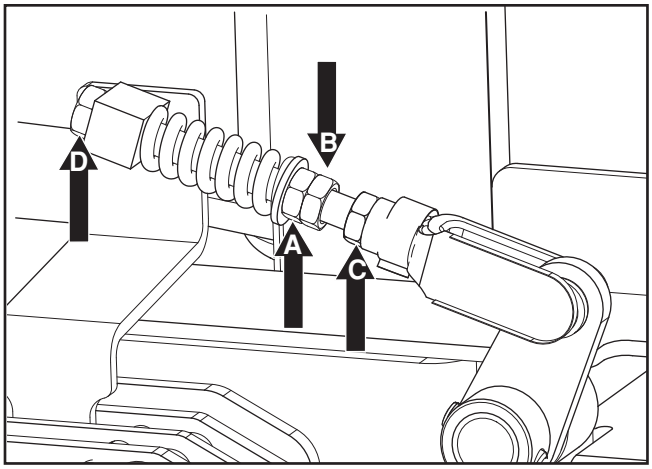

8065-052

Parking brake adjustment

6. Engage the park brake. Measure the distance between the D brake bolt and the brake swivel. The distance should be 1/8"-1/4".
7. If adjustments are needed, loosen C jam nut. Turn the brake bolt until the distance is correct. Retighten C jam nuts.

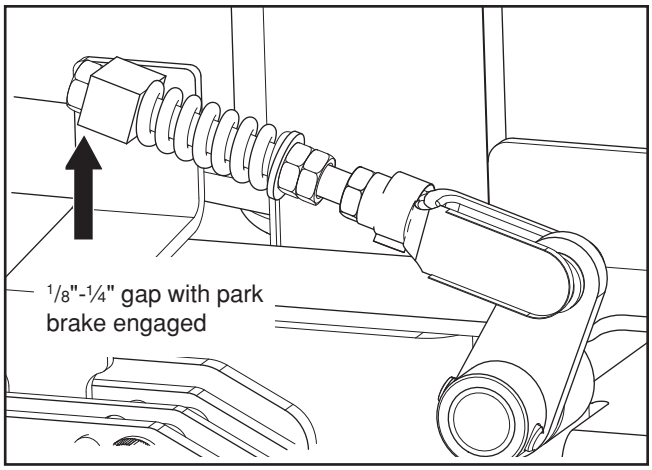

8065-052

Measure gap

Deck Belt

Deck Belt Removal

Park on a level surface. Apply park brake. Lower the deck into the lowest cutting position.

1. Remove foot plate and belt shields.
2. Remove any dirt or grass that may have accumulated around the cutter housings and entire deck surface.
3. With a ½" breaker bar and using the square opening in the idler arm, shift the arm counter clockwise to relieve the tension on the belt.
4. Carefully roll the belt over the top of the cutter housing pulleys.
5. Remove the belt guide hardware with a ½" wrench and set belt guide aside.
6. Remove the belt from around the electric clutch on the engine shaft.

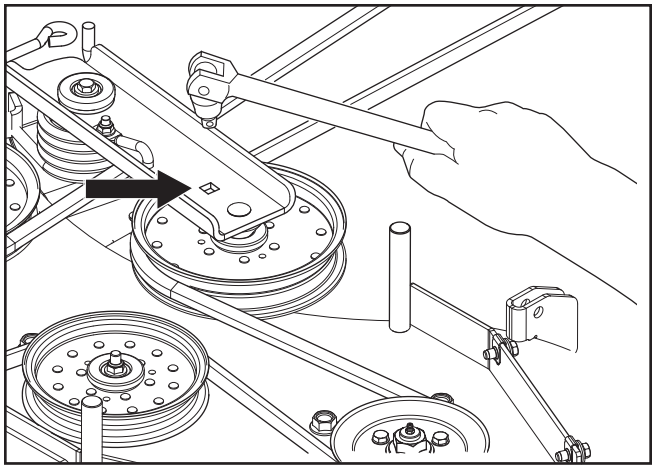

8065-040

Release the belt tension

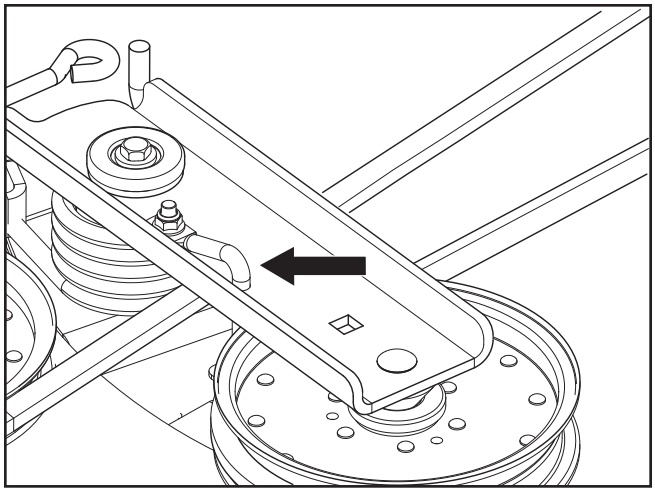

8065-046

Remove belt guide

Deck Belt Installation

NOTE: For ease in installing the deck belt, refer to the routing decal on the cutting deck.

1. Place the belt around all the pulleys except the center spindle pulley.
2. With a ½" breaker bar, shift the idler arm counter clockwise. When there is enough slack, slip the belt onto the center spindle pulley.
3. Reinstall the belt guide removed in Step 5 above.
4. Double check belt routing to make sure it matches the routing decal, and that the belt does not have any twist. Correct if needed.

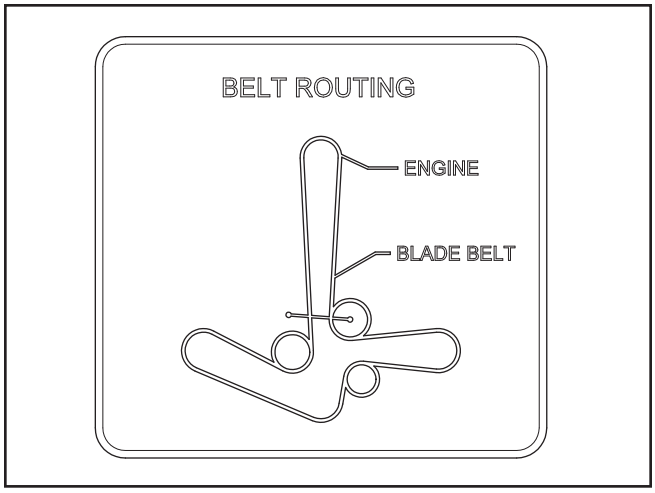

8065-047

Refer to belt routing decal

5. Adjust belt tension by turning the eyebolt until there is approximately 7/8" -1" of threads showing outside the nut.
6. Belt tension should be set to 60-70 lbs.
7. Replace belt shields on both mandrel housings and secure with fasteners.

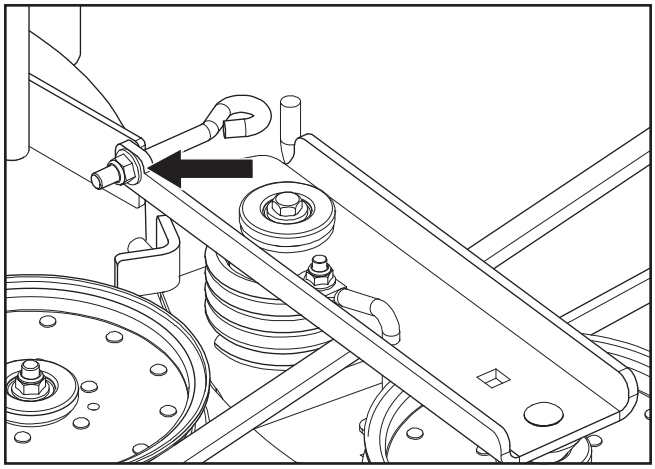

8065-054

Adjust belt tension

Pump Belt

The belts are not adjustable. Replace belts if they begin to slip from wear.

Replacing Pump Belt

Park the mower on a level surface. Engage the parking brake.

Belt Removal

1. Remove the deck belt (see ***Deck Belt Removal*** in this section of the manual).
2. Remove clutch stop to access the belt.
3. Disconnect clutch wire.
4. With a ½" breaker bar and using the square opening in the idler arm, shift the arm to create slack in the belt.
5. Remove belt from the engine and pump pulleys.

Belt Installation

1. Wrap the belt around the engine pulley.
2. Wrap the belt around the left pump pulley.
3. Route the belt around the inside of the idler pulley.
4. With a ½" breaker bar and using the square opening in the idler arm, shift the arm to create slack in the belt.
   While holding the idler back with the breaker bar, wrap the belt around the right pump pulley.
5. Replace and secure clutch stop.
6. Reinstall the deck belt. (See ***Deck Belt Installation*** in this section of the manual).

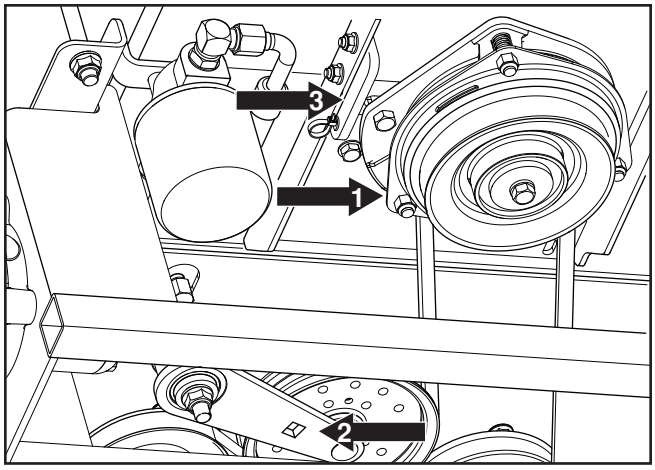

8065-041

1. Electric clutch
2. Idler release placement
3. Clutch stop

Pump belt removal

V-belts

Check every 100 hours of operation. Check for severe cracking and large nicks.

NOTE: The belt will show some small cracks in normal operation.

Cutting Blades

To attain the best mowing effect, it is important that blades are well sharpened and not damaged.

Replace blades that have been bent or cracked when hitting obstacles.

Let the service workshop decide whether a blade with large nicks can be repaired/ground or must be replaced. Balance the blades after sharpening.

Check the blade mounts.

IMPORTANT INFORMATION

The sharpening of blades should be carried out by an authorized service workshop.

Blade Replacement

WARNING!

Blades are sharp. Protect your hands with gloves and/or wrap blades with a heavy cloth when handling.

1. Remove blade bolt by turning counterclockwise.
2. Install new or re-sharpened blade with stamped GRASS SIDE facing towards ground/grass (down) or THIS SIDE UP facing deck and cutter housing.
3. Install and tighten blade bolt securely.
4. Torque blade bolt to 90 ft-lbs (122 Nm).

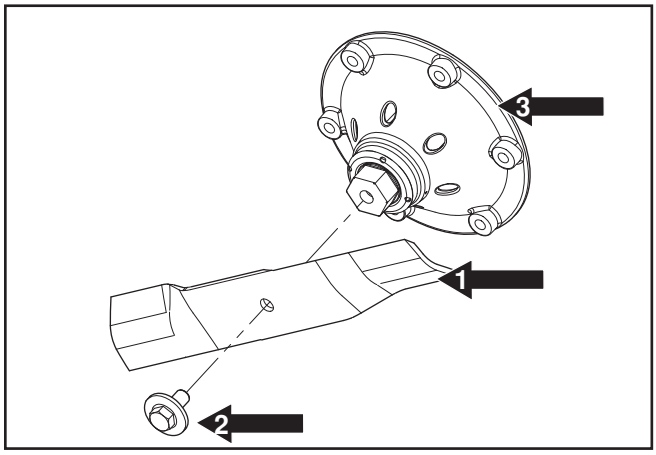

8065-028

1. Blade
2. Blade bolt (special)
3. Cutter housing

Blade attachment

IMPORTANT INFORMATION

Special blade bolt is heat treated.

Replace with a Husqvarna bolt if required.

Do not use lower grade hardware than specified.

Adjusting the Mower Deck

Leveling Deck

Adjust the deck while the mower is on a level surface. Make sure the tires are inflated to the correct pressure. See ***Tire Pressures*** in *Maintenance* section. If tires are under or over inflated, the deck cannot be properly adjusted. Faulty mower deck adjustments will cause an uneven mowing result.

Four bolts control the height and pitch of the mower deck. The deck should be adjusted slightly higher in the rear.

NOTE: To insure accuracy of leveling procedure, mower deck drive belt must be installed prior to leveling the deck.

1. Wear heavy gloves. Turn each outer blade tip to align the deck in a side-to-side manner.
2. Measure from the floor surface up to the bottom of the blade tip on the discharge side of the mower deck. Retain this measurement. Move to the opposite side; check that measurement is the same. If adjustment is required, loosen the locknut and adjust bolt up until both side-to-side measurements are equal. Retain measurement.
3. Turn both outer blades to align with the deck in front-to-rear manner. Reposition rear mounting bolts up or down until rear blade tips are positioned 1/8" to 3/8" higher in the rear than the front blade tips.
4. Confirm measurements once again. Blade tip height should be equal in a side-to-side manner. In the rear, blade tips should be 1/8" to 3/8" higher than the front measurement. In the front, blade tips should be equal from side-to-side.

NOTE: This will place the mower deck in a standard measurement position. Additional adjustment may be required to achieve desired cut for the type of grass being mowed or conditions.

WARNING!

Blades are sharp. Protect your hands with gloves and/or wrap blades with a heavy cloth when handling.

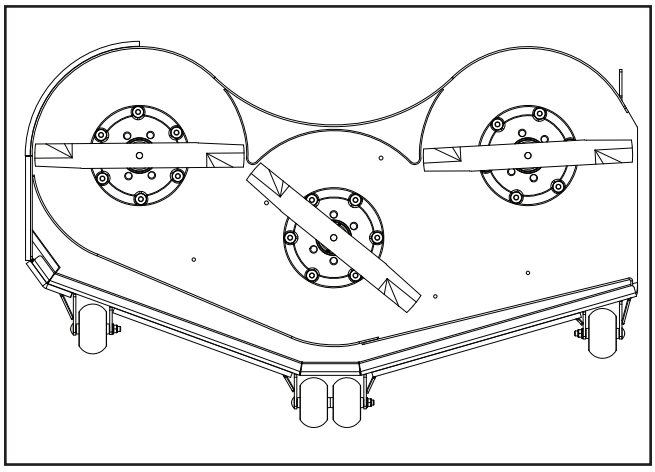

8065-102

Set blades to begin leveling

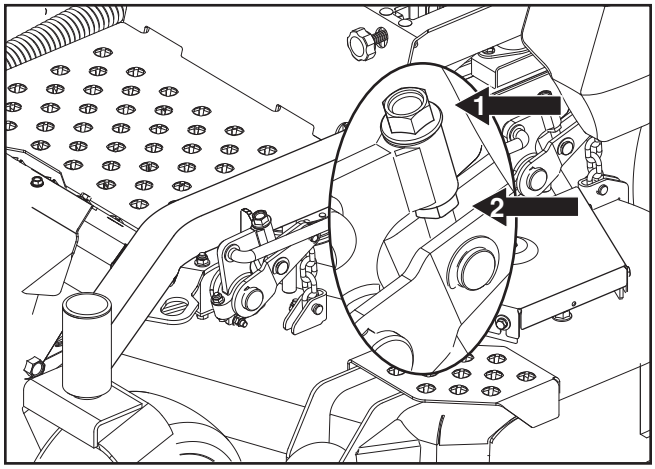

8065-037

1. Adjustment bolt
2. Locknut

Leveling the mower deck

Anti-scalp Rollers

Anti-scalp rollers keep the deck in the proper position to help prevent scalping in most terrain conditions. Do not adjust the rollers to support the deck.

IMPORTANT INFORMATION

Adjust anti-scalp rollers with the mower on a flat level surface.

To avoid deck damage, the anti-scalp rollers must not be adjusted to support the deck.

The anti-scalp rollers can be set in three positions:

- Upper position 1 to 2½" (25 to 63 mm) grass.
- Middle position 2½" to 4" (63 to 102 mm) grass.
- Lower position 4" to 5" (102 to 127 mm) grass.

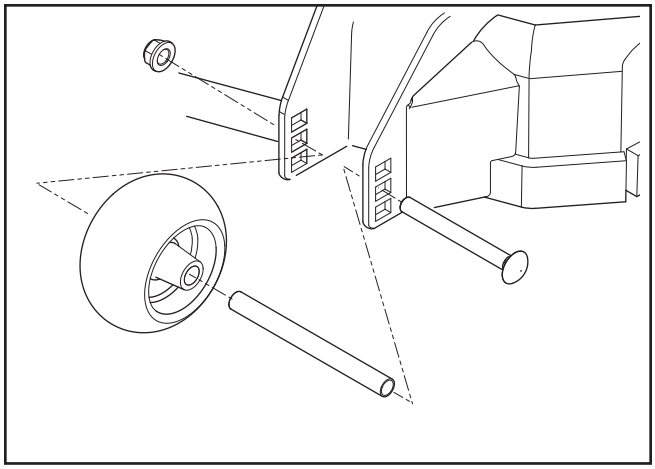

8065-029

Anti-scalp rollers

Deck Lift Spring

When mowing 2" or lower, it may be necessary to adjust the deck lift springs. Access the springs by tilting the seat forward.

Loosen the nut to adjust the spring tension.

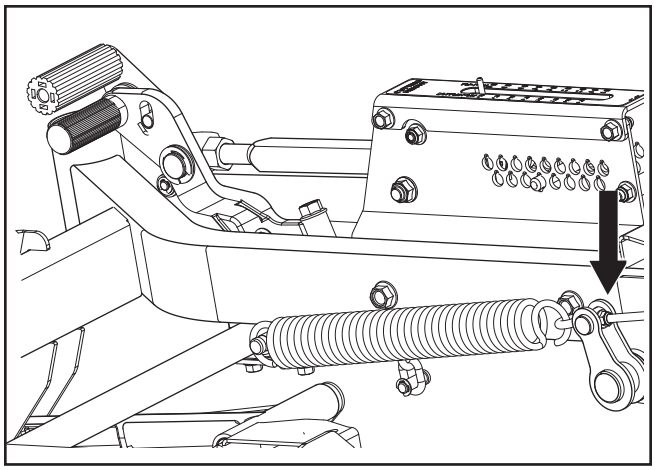

8065-062

Deck lift spring

Caster Wheels

Check every 200 hours. Check that wheels rotate freely.

Removal and Installation

Remove nut and caster bolt. Pull the wheel out of the fork. Install in reverse order. Tighten caster bolt. Torque to 45 ft-lbs (61 Nm), then back nut off ½ turn.

NOTE: Tire should rotate freely but axle spacers should not.

If wheels do not rotate freely take the unit to the dealer for service.

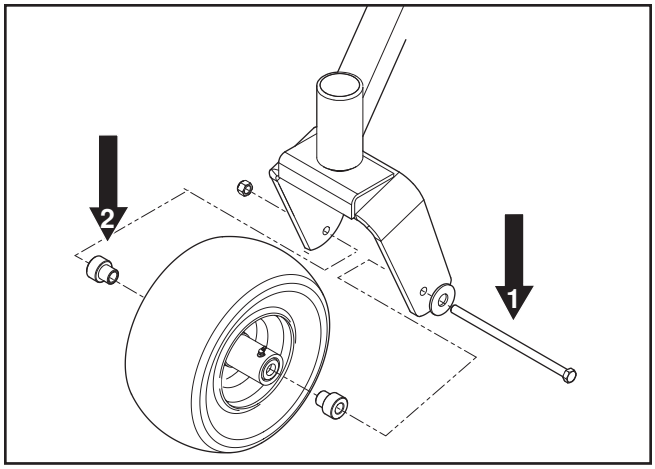

8065-030

1. Caster bolt
2. Axle spacer

Caster wheel

Hardware

Check daily. Inspect the entire machine for loose or missing hardware.

Cleaning

Regular cleaning and washing, especially under the mower deck, will increase the machine's life-span. Make it a habit to clean the machine directly after use (after it is cooled), before the dirt sticks.

Do not spray water on the top of the mower deck. Use compressed air to clean the top side of mower deck. Regularly clean deck and underside of the deck with normal water pressure. Do not use a high pressure washer or steam cleaner. Avoid spraying engine and electrical components with water.

Do not rinse hot surfaces with cold water. Let unit cool before washing.

Use protective glasses when cleaning and washing.

Lubrication Schedule

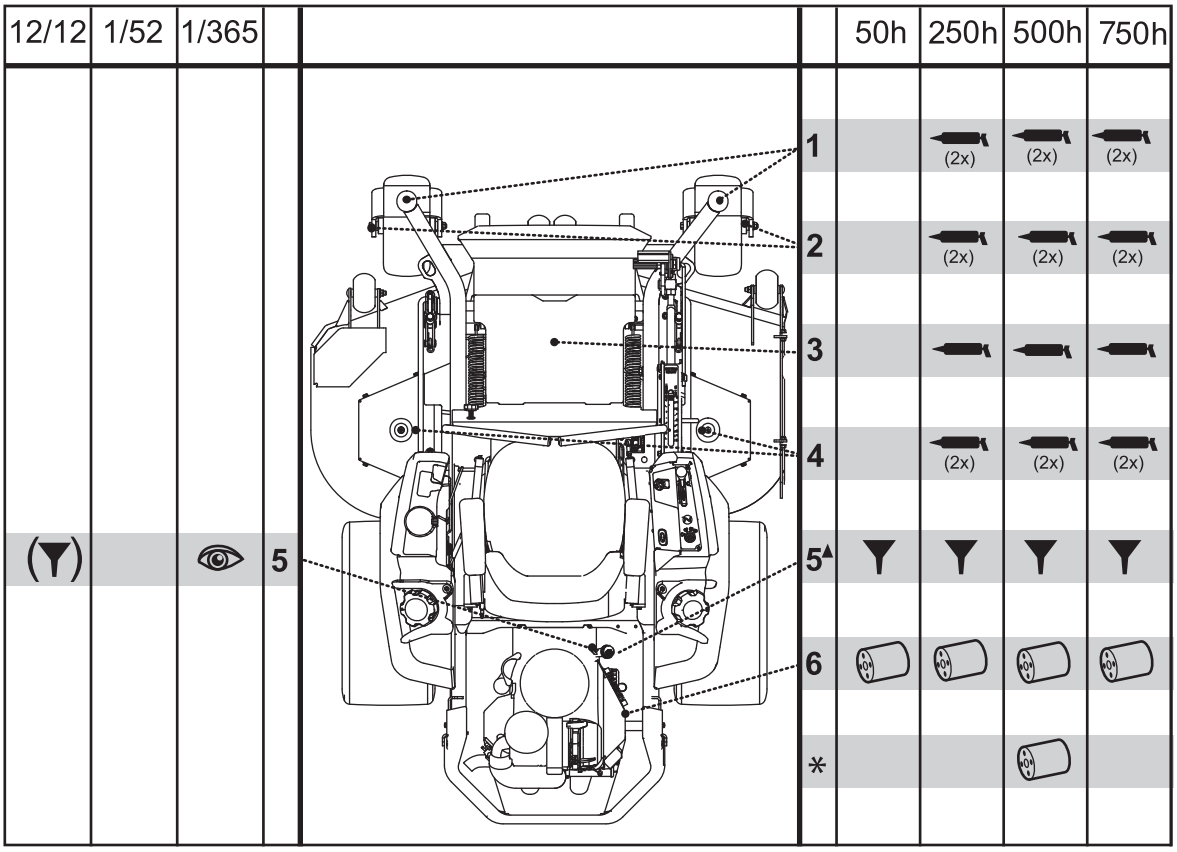

8065-031

12/12 Every year	Lubricate with grease gun	Filter change
1/52 Every Week		
1/365 Every day	Oil change	Level check

***** Change hydraulic drive filters.

▲ Change engine oil every 50 hours.

General

Remove the ignition key to prevent unintentional movements during lubrication.

When lubricating with an oil can, it must be filled with engine oil.

When lubricating with grease, unless otherwise stated, use high grade molybdenum disulphide grease.

For daily use, the machine should be lubricated twice weekly.

Wipe away excess grease after lubrication.

It is important to avoid getting lubricant on the belts or the drive surfaces on the belt pulleys. Should this happen, attempt to clean them with spirits. If the belt continues to slip after cleaning, it must be replaced. Gasoline or other petroleum products must not be used to clean belts.

Wheel and Deck Zerks

Use only good quality bearing grease.

Grease from well-known brand names (petrochemical companies, etc.) usually maintains a good quality.

Front Wheel Mount

Remove dust cap to expose zerk. Lubricate with a grease gun until the grease is forced out around the top washer.

Front Wheel Bearings

Lubricate 3-4 strokes with a grease gun on each set of wheel bearings.

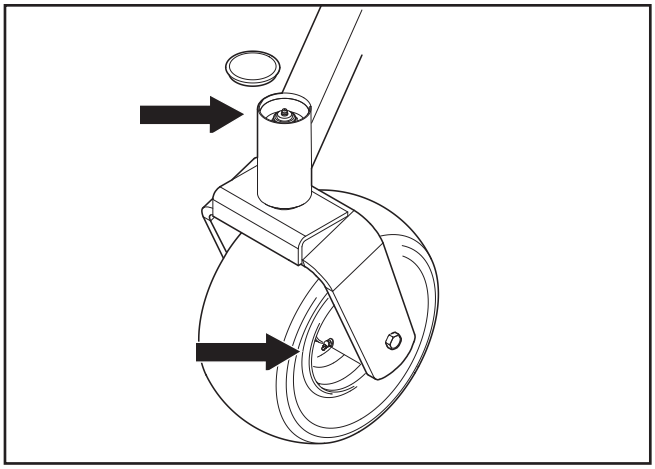

8065-032

Lubricating front wheels

Deck Spindles

Lower the cutting deck completely.

If a grease gun without rubber hose is used, the foot plate must be removed to access the center spindle.

Lubricate with a grease gun, 2-3 strokes per spindle.

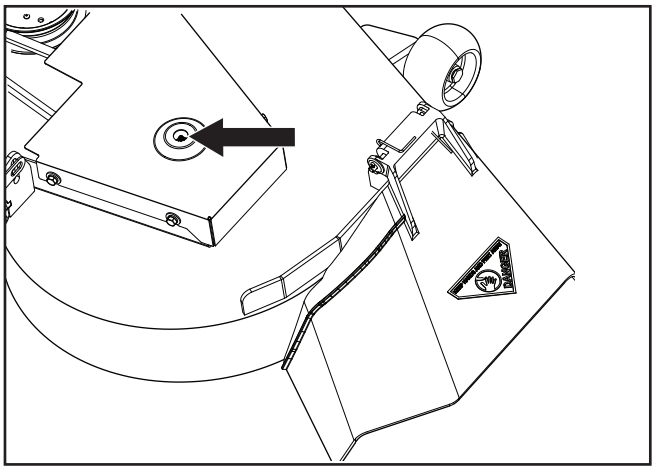

8058-058

Outer deck spindle

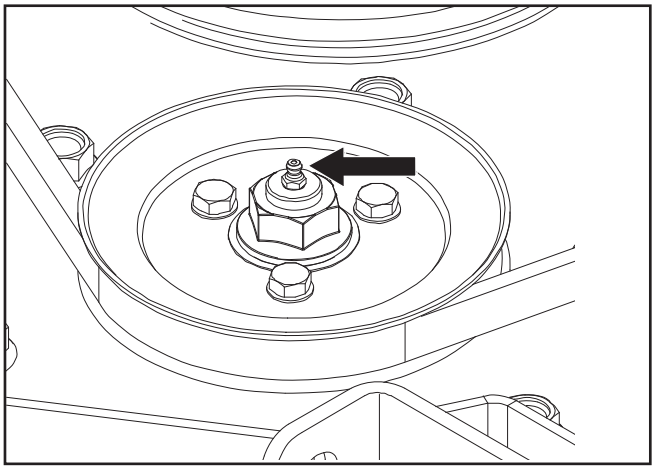

8065-200

Center deck spindle

Hydraulic Drive

Fluid and Filter Change

The hydraulic drive is designed with an external filter for ease of maintenance. To ensure constant fluid quality levels and longer life, an oil filter change interval of every 500 hours is recommended.

The following procedure can be performed with the pump installed in the vehicle, and the vehicle on level ground.

1. Lock the vehicle parking brake.
2. Place an oil drain pan with a 2 gallon capacity beneath the oil reservoir. Remove the drain port and drain oil. Remove the oil filter from the pump.

Drain old oil filters of all free-flowing oil prior to disposal. Place used oil in appropriate containers and dispose of it in accordance with laws in your area.

3. After the oil has drained, wipe the filter base surface off and apply a film of new oil to the gasket of the new replacement filter.
4. Prefill the oil filter with new oil and install the new filter by hand. Turn ¾ to one full turn after the filter gasket contacts the filter base surface.
5. Fill reservoir with ***synthetic 15W 50*** oil to the level of the lower hole in the fill tube. DO NOT fill above the level of the upper hole. After purging, check levels and add oil if necessary.
6. Reinstall the reservoir cap by hand. Do not overtighten.
7. Proceed to the purge procedure.

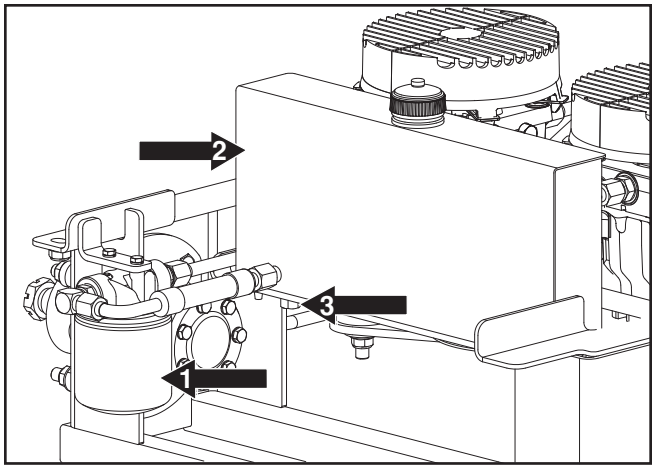

8065-036

1. Pump filter
2. Oil reservoir
3. Drain port

Changing the hydraulic pump oil and filter

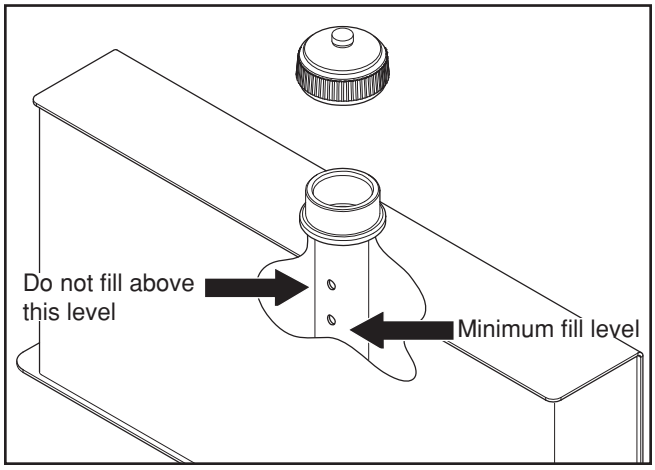

8065-048

Transmission Purging Procedures

Due to the effects air has on efficiency in hydrostatic drive applications, it is critical to purge the system.

These purge procedures should be implemented any time a hydrostatic system has been opened to facilitate maintenance or any additional oil has been added to the system.

Resulting symptoms in hydrostatic systems may be:

- Noisy operation.
- Lack of power or drive after short term operation.
- High operation temperature and excessive expansion of oil.

Before starting, make sure the oil tank is at the proper oil level. If not, fill to the specifications outlined in this section.

The following procedures are best performed with the vehicle drive wheels off the ground, then repeated under normal operating conditions.

1. Disengage the brake if activated.
2. With the bypass valve open and the engine running at fast idle, slowly move the directional control in both forward and reverse directions (5 or 6 times). As air is purged from the unit, the oil level will drop.
3. With the bypass valve closed and the engine running, slowly move the directional control in both forward and reverse directions (5 to 6 times). Check the oil level and add oil as required after stopping the engine.
4. It may be necessary to repeat Steps 2 and 3 until all the air is completely purged from the system. When the hydraulic drive operates at normal noise levels and moves smoothly forward and reverse at normal speeds, the hydraulic drive is considered purged.
5. After the vehicle has been used two times, the oil level should be checked while the oil is cold and adjusted accordingly.

TROUBLESHOOTING

Problem	Cause
Engine will not start	• Blade switch is engaged. • Steering controls are not locked in the neutral position • Parking brake is not activated • Battery is dead • Contamination in the carburetor or fuel line. • Fuel supply is closed or the shutoff valve for the fuel tank is in the wrong position • Clogged fuel filter or fuel line • Ignition system faulty
Starter does not turn the engine over	• Battery is dead • Poor contact of the battery terminal cable connections • Blown fuse • Fault in the starter safety circuit. See ***Safety System*** in the *Maintenance* Section
Engine runs rough	• Faulty carburetor • Choke control is pulled out with a warm engine • Clogged fuel filter or jet • Clogged ventilation valve on the fuel cap • Fuel tank nearly empty • Fouled spark plugs • Rich fuel mixture or fuel-air mixture. • Wrong fuel type • Water in fuel • Clogged air filter
Engine seems weak	• Clogged air filter • Fouled spark plugs • Carburetor incorrectly adjusted • Air trapped in hydraulic system
Machine vibrates	• Blades are loose • Blades are incorrectly balanced • Engine is loose

TROUBLESHOOTING

Problem	Cause
Engine overheats	• Clogged air intake or cooling fins • Engine overloaded • Poor ventilation around engine • Defective engine speed regulator • Too little or no oil in the engine • Contamination in the carburetor or fuel line. • Fouled spark plugs
Battery not charging	• Poor contact of the battery terminal cable connections • Charging lead is disconnected
The machine moves slowly, unevenly, or not at all	• Parking brake on • Bypass valve on pump open • Drive belt for the transmission slack or has come off • Air trapped in hydraulic system
Mower deck not engaging	• Drive belt for the mower deck has come loose • Contact for the electromagnetic coupling has loosened • Blade switch is faulty or has come loose from cable contact • Blown fuse
Transaxle leaks oil	• Damaged seals, housing, or gaskets • Air trapped in hydraulic system
Uneven mowing results	• Different air pressure in tires on the left and right sides. • Bent blades • Suspending for the mower deck is uneven • Blades are dull • Driving speed too high • Grass is too long • Grass collected under the mower deck

STORAGE

Winter Storage

The machine should be readied for storage at the end of the mowing season or if it will not be in use for longer than 30 days.

Fuel allowed to stand for long periods of time (30 days or more) can leave sticky residues that can plug the carburetor and disrupt engine function.

Fuel stabilizers are an acceptable option as regards to the sticky residues that can occur during storage.

Add stabilizer to the fuel in the tank or in the storage container. Always use the mixing ratios specified by the manufacturer of the stabilizer. Run the engine for at least 10 minutes after adding the stabilizer so that it reaches the carburetor. Do not empty the fuel tank and the carburetor if a stabilizer has been added.

WARNING!

Never store an engine with fuel in the tank indoors or in poorly ventilated spaces where fuel vapor can come in contact with open flames, sparks, or a pilot light such as in a boiler, hot water tank, clothes drier, etc. Handle the fuel with care. It is very flammable and can cause serious personal injury and property damage. Drain the fuel into an approved container outdoors and far away from open flame. Never use gasoline for cleaning. Use a degreaser and warm water.

To ready the machine for storage, follow these steps:

1. Thoroughly clean the machine, especially under the mower deck. Touch up damage to the paint and spray a thin layer of oil on the underside of the mower deck to avoid corrosion.
2. Inspect the machine for worn or damaged parts and tighten any nuts or screws that may have become loose.
3. Change the engine oil; dispose of properly.
4. Empty the fuel tanks or add a fuel stabilizer. Start the engine and allow it to run until the carburetor is drained of fuel or the stabilizer has reached the carburetor.
5. Remove the spark plug and pour about a tablespoon of engine oil into the cylinder. Turn over the engine so that the oil is evenly distributed and then refit the spark plug.
6. Lubricate all grease zerks, joints, and axles.
7. Remove the battery. Clean, charge, and store the battery in a cool place, but protect it from direct cold.
8. Store the machine in a clean, dry place and cover it for extra protection.

Service

When ordering spare parts, please specify the purchase year, model, type, and serial number.

Always use genuine Husqvarna spare parts.

An annual check-up at an authorized service workshop is a good way to ensure that the machine performs its best the following season.

WIRING DIAGRAM

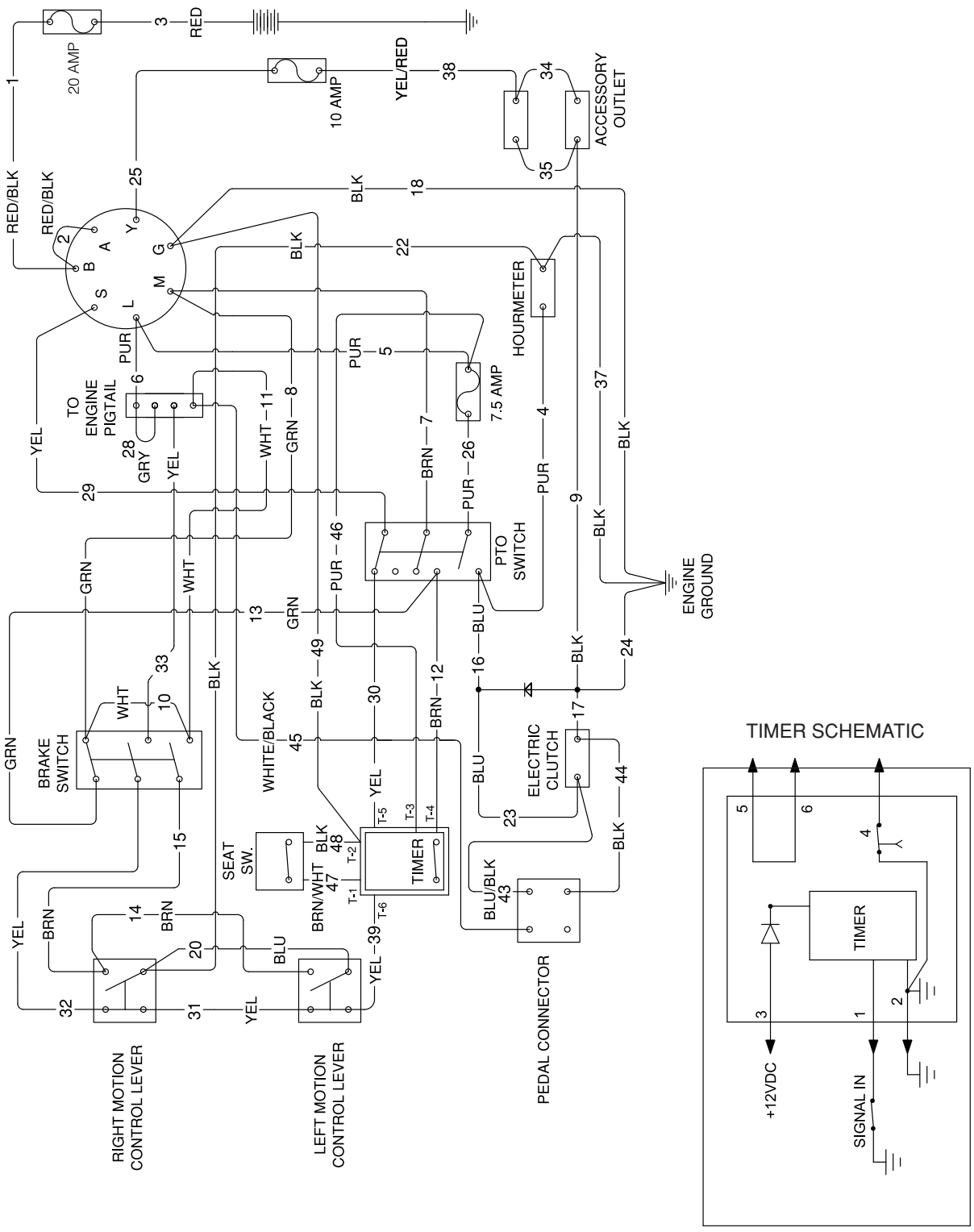

TECHNICAL DATA

	PZ34
Engine	
Manufacturer	Kawasaki
Type	FX921
Power	23.1 kW @ 3300 RPM*
Lubrication	Pressure w/ Oil Filter
Fuel	Min 87 octane unleaded (Max ethyl alcohol 10%, Max MTBE 15%)
Fuel tanks capacity	11 gallons / 41.6 liters
Cooling	Air cooled
Air filter	Heavy duty canister
Alternator	12v 15 amp @ 3600 rpm
Starter	Electric
Transmission	
Transmission	Dual pump and wheel motor
Speed and direction controls	Dual levers, foam gripped
Speed forward	0-12 mph - 0-19 Km/h
Speed reverse	0-6 mph - 0-8 Km/h
Brakes	Disc
Front caster tires, smooth tread	13 x 6.5 Flat Free
Rear tires, turf pneumatic	24 x 12-12 4 ply
Tire pressures	15 PSI / 103 kPa / 1 bar

1) *See the Engine Manufacturer's manual for engine specifications.*

2) *The power rating of the engines indicated is the average net power output (at specified rpm) of a typical production engine for the engine model measured to SAE standard J1349/ISO1585. Mass production engines may differ from this value. Actual power output for the engine installed in the final machine will depend on the operating speed, environmental conditions and other variables.*

TECHNICAL DATA

	PZ34
Frame	
Cutting Width	72" (183 cm)
Cutting Height	1"-5" (2.5-12.7 cm)
Uncut Circle	0
Number of Blades	3
Blade Length	25" / 63.5 cm
Nose Rollers	Yes
Antii-scalp Rollers	6 adjustable
Sprung Seat	Suspension
Hinged Arm Rests	Yes
Hour Meter	Yes
Blade Engagement	250 ft-lb Ogura
Deck Construction	7 gauge
Productivity	7 acres/h / 28,328 m^2/h
Dimension	
Weight	1400 lbs / 635 kg
Base Machine Length	86" / 218 cm
Base Machine Height	47½" / 121 cm
Base Machine Width	57" / 145 cm
Overall Width, Chute Up	73½" / 187 cm
Overall Width, Chute Down	86" / 218 cm
Overall Height, ROPS Up	72" / 183 cm

Torque Specifications

Engine crankshaft bolt	50 ft/lb (67 Nm)	Standard ¼" fasteners	9 ft/lb (12 Nm)
Deck pulley bolts	150 ft/lb (203 Nm)	Standard 5/16" fasteners	18 ft/lb (25 Nm)
Lug nuts	75 ft/lb (100 Nm)	Standard 3/8" fasteners	33 ft/lb (44 Nm)
Blade bolt	90 ft/lb (122 Nm)	Standard 7/16" fasteners	52 ft/lb (70 Nm)
		Standard ½" fasteners	80 ft/lb (110 Nm)

HEX HEAD CAP SCREWS

The torque values shown should be used as a general guideline when specific torque values are not given.

U.S. Standard Hardware

Grade		SAE Grade 5		SAE Grade 8		Flangelock Screw w/Flangelock Nut	
	Size	ft./lbs	Nm	ft./lbs	Nm	ft./lbs	Nm
Shank Size (Diameter in inches, fine or coarse thread)	1/4	9	12	13	18		
	5/16	18	24	28	38	24	33
	3/8	31	42	46	62	40	54
	7/16	50	68	75	108		
	1/2	75	102	115	156		
	9/16	110	150	165	224		
	5/8	150	203	225	305		
	3/4	250	339	370	502		
	7/8	378	513	591	801		
	1 1/8	782	1060	1410	1912		

** Grade 5 - Minimum commercial quality (lower quality not recommended)

Metric Standard Hardware

Grade		Grade 8.8		Grade 10.9		Grade 12.9	
	Size	ft./lbs	Nm	ft./lbs	Nm	ft./lbs	Nm
Shank Size (Diameter in inches, fine or coarse thread)	M4	1.5	2	2.2	3	2.7	3.6
	M5	3	4	4.5	6	5.2	7
	M6	5.2	7	7.5	10	8.2	11
	M7	8.2	11	12	16	15	20
	M8	13.5	18	18.8	25	21.8	29
	M10	24	32	35.2	47	43.5	58
	M12	43.5	58	62.2	83	75	100
	M14	70.5	94	100	133	119	159
	M16	108	144	147	196	176	235
	M18	142	190	202	269	242	323
	M20	195	260	275	366	330	440
	M22	276	368	390	520	471	628
	M24	353	470	498	664	596	794
	M27	530	707	474	996	904	1205

CONFORMITY CERTIFICATES

USA requirements

Labels are placed on the engine and/or in the engine compartment stating that the machine will fulfill the requirements. This is also applicable to special requirements for any of the states, (California emission rules etc.). Do not remove any of these labels. Certificates can also be supplied with the machine at delivery or written in the Engine manual. Take care of them as they are valuable documents.

SERVICE JOURNAL

Action	Date, mtr reading, stamp, sign
Delivery Service	
Charge and connect the battery.	☐
Adjust the tire pressure of all wheels to 15 PSI (1 bar).	☐
Connect the contact box to the cable for the seat's safety switch.	☐
Check hydraulic oil level.	☐
Check hydraulic hoses for kinking or leaks.	☐
Check neutral position.	☐
Fill with fuel and open the fuel shut off valve.	☐
Start the engine.	☐
Check that there is drive to both wheels.	☐
Check the mower deck pitch and adjustment.	☐
Check:	
Safety switch for the parking brake.	☐
Safety switch for the mower deck.	☐
Safety switch in the seat.	☐
Safety switch in the steering controls.	☐
Parking brake functionality and adjustment.	☐
Driving forward.	☐
Driving backward.	☐
Engaging the blades.	☐
Check the idle speed	☐
Check the engine high idle speed	☐
Inform the customer about:	
The need and advantages of following the service schedule.	☐
The need and advantages of leaving the machine for service.	☐
The effects of service and maintaining a service journal on the machine's resale value.	☐
Application areas for mulching.	☐
Fill in the sales papers, etc.	
Delivery service has been carried out. No remaining notes. Certified:	

SERVICE JOURNAL

Action	Date, mtr reading, stamp, sign
After 10 hours	
Change the engine oil.	☐
Change the oil filter.	☐
Check hydraulic oil level.	☐
Inspect hydraulic hoses.	☐
Inspect hydraulic belt	☐
Inspect hydraulic filter.	☐
Check neutral position.	☐
Check safety system.	☐
Check seat belt.	☐
Check ROPS.	☐
Check fuel system for leaks.	☐
Inspect safety guards and shields.	☐
Check brake adjustment.	☐

SERVICE JOURNAL

Action	Date, mtr reading, stamp, sign
Daily Service	
Clean debris from mower.	☐
Check engine oil level.	☐
Check the tire pressures.	☐
Check underside of deck.	☐
Inspect deck pulleys.	☐
Check/clean the engine's cooling air intake.	☐
Check safety system.	☐
Check seat belt.	☐
Check ROPS.	☐
Check fuel system for leaks.	☐
Inspect safety guards and shields.	☐
Check brake adjustment.	☐

SERVICE JOURNAL

Action	Date, mtr reading, stamp, sign
50-Hour Service	
Clean debris from mower.	☐
Check engine oil level.	☐
Check the tire pressures.	☐
Check underside of deck.	☐
Inspect deck pulleys.	☐
Check/clean the engine's cooling air intake.	☐
Check safety system.	☐
Check seat belt.	☐
Check ROPS.	☐
Check fuel system for leaks.	☐
Inspect safety guards and shields.	☐
Check brake adjustment.	☐

SERVICE JOURNAL

Action	Date, mtr reading, stamp, sign
250-Hour Service	
Grease fittings (caster pivots and caster wheels)	☐
Inspect dampers	☐
Inspect frame	☐
Inspect throttle and choke cables	☐
Inspect hardware	☐
Check the tire pressures	☐
Change the engine oil and filter	☐
Change air filter	☐
Inspect spark plug	☐
Inspect fuel filter	☐
Check engine RPM	☐
Clean underside of deck	☐
Check blade pitch	☐
Grease blade spindles	☐
Inspect spindle bearings	☐
Inspect deck belt and blades	☐
Inspect idler arm bearings	☐
Inspect deck idler pulleys	☐
Check hydraulic oil level	☐
Inspect hydraulic filter	☐
Inspect hydraulic drive belt	☐
Inspect hydraulic hoses	☐
Check neutral position	☐
Inspect battery connections	☐
Check safety system	☐
Check seat belt	☐
Check ROPS	☐
Check fuel system for leaks	☐
Inspect safety guards and shields	☐
Check brake adjustment	☐

SERVICE JOURNAL

Action	Date, mtr reading, stamp, sign
500-Hour Service	
Grease fittings (caster pivots and caster wheels)	☐
Inspect dampers	☐
Inspect frame	☐
Inspect throttle and choke cables	☐
Inspect hardware	☐
Check the tire pressures	☐
Change the engine oil and filter	☐
Change air filter	☐
Inspect spark plug	☐
Inspect fuel filter	☐
Check engine RPM	☐
Clean underside of deck	☐
Check blade pitch	☐
Grease blade spindles	☐
Inspect spindle bearings	☐
Inspect deck belt and blades	☐
Inspect idler arm bearings	☐
Inspect deck idler pulleys	☐
Change hydraulic oil level	☐
Change hydraulic filter	☐
Replace hydraulic drive belt	☐
Inspect hydraulic hoses	☐
Check neutral position	☐
Inspect battery connections	☐
Load test battery	☐
Clean electrical connections	☐
Inspect the clutch	☐
Check safety system	☐
Check seat belt	☐
Check ROPS	☐
Check fuel system for leaks	☐
Inspect safety guards and shields	☐
Check brake adjustment	☐

SERVICE JOURNAL

Action	Date, mtr reading, stamp, sign
At Least Once Each Year	
Clean the engine's cooling air intake.	☐
Replace the air cleaner's pre-filter (foam).	☐
Replace the air filter's paper cartridge.	☐
Change the engine oil.	☐
Replace the engine oil filter	☐
Check/adjust the cutting height	☐
Check/adjust the parking brake	☐
Clean/Change the spark plugs	☐
Inspect spark plug	☐
Check the engine valve clearance	☐

SERVICE JOURNAL

Action	Date, mtr reading, stamp, sign

SERVICE JOURNAL

Action	Date, mtr reading, stamp, sign

Husqvarna®

www.husqvarna.com

115 610628 Rev A

2013-07-15