Husqvarna®

IPL, Automower 320, 581 84 68-01, Rev.1, 2013-06

320

2013

Spare parts
Ersatzteile
Pièces détachées
Reserve onderdelen
Repuestos
Reservdelar

A AUTOMOWER 320
BODY

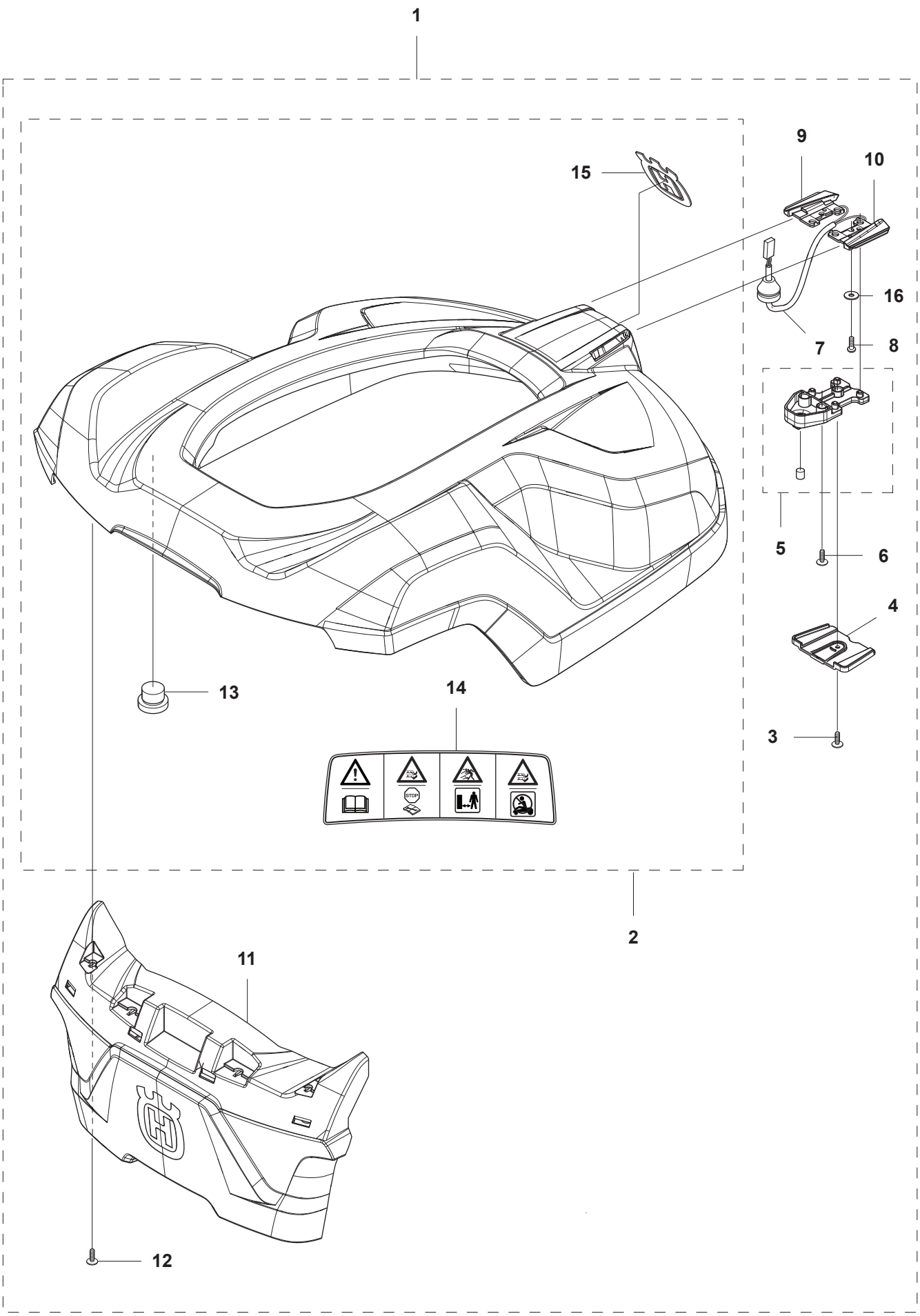

Page A	320		COVER	
Position	**Article**	**Quantity**	**Notes**	**Kit**
1	580 76 63 02	1	BODY SYSTEM	
2	581 62 04 01	1	BODY KIT	1
3	575 54 33 14	1	SCREW	1
4	580 35 19 01	1	SHIELD	1
5	581 62 05 01	1	HOLDER KIT	1
6	575 54 33 14	2	SCREW	1
7	580 25 73 01	1	LOOM	1
8	580 87 78 01	2	SCREW ITXPANT	1
9	579 53 30 01	1	COVER	1
10	579 53 30 02	1	COVER	1
11	579 51 98 01	1	BUMPER	1
12	574 45 01 01	4	SCREW ITXPANT	1
13	580 52 68 01	4	CAP	1, 2
14	579 72 48 01	1	LABEL	1, 2
15	574 38 21 01	1	DECAL	1, 2
16	734 11 37 41	2	WASHER	1, 2

B AUTOMOWER 320
CHASSIS UPPER

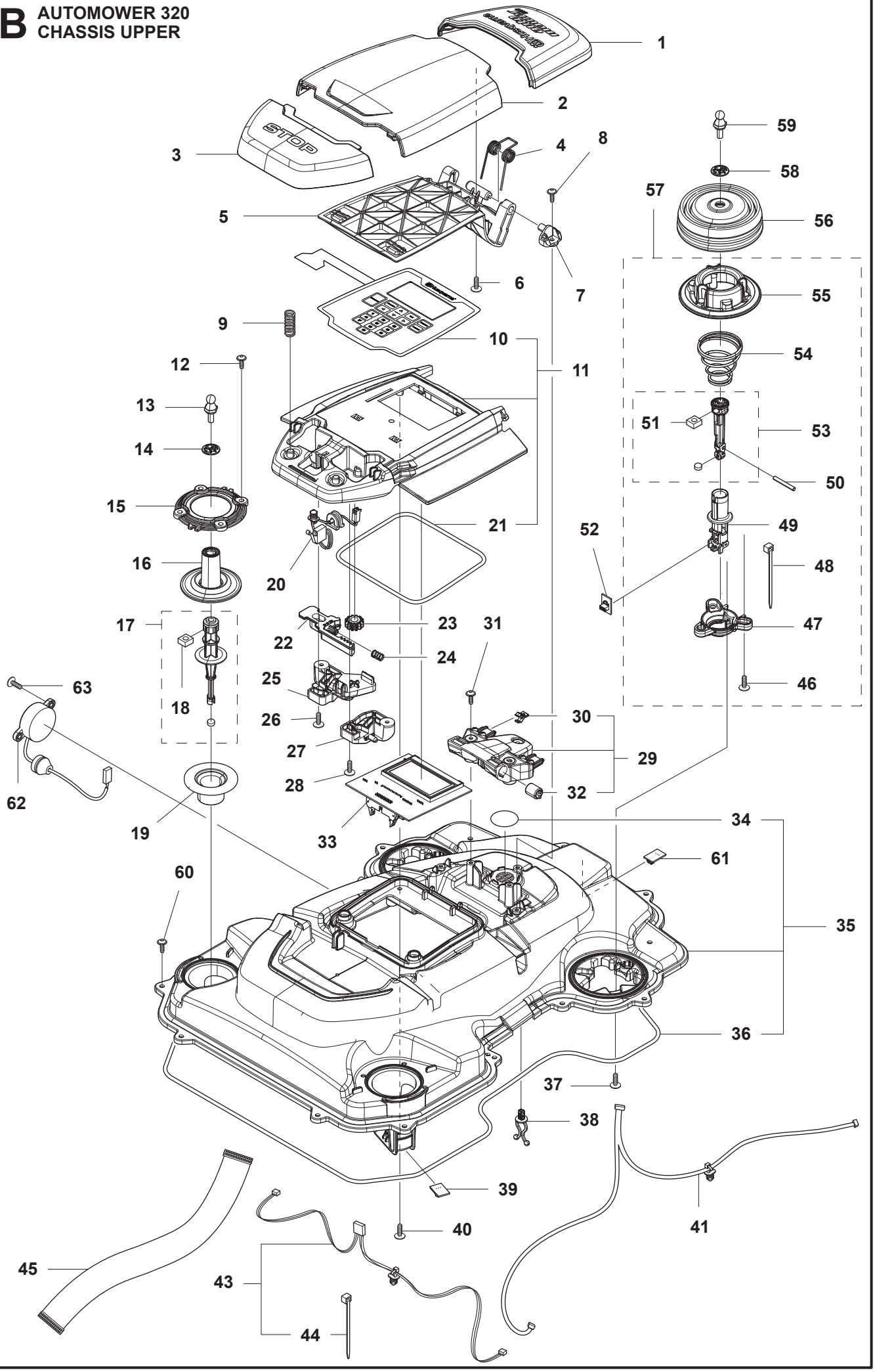

Page B	320		CHASSIS UPPER	
Position	**Article**	**Quantity**	**Notes**	**Kit**
1	579 45 83 01	1	COVER	
2	579 45 85 01	1	HATCH	
3	579 45 81 01	1	BUTTON	
4	580 67 30 01	1	TORSION SPRING	
5	579 45 86 01	1	HINGE	
6	575 54 33 14	2	SCREW	
7	579 45 87 01	2	HINGE PIN	
8	575 54 33 14	2	SCREW	
9	535 13 01 01	2	SPRING	
10	579 62 79 01	1	KEYBOARD	11
11	581 62 06 01	1	COVER KIT	
12	574 45 01 01	8	SCREW ITXPANT	
13	580 52 67 01	2	STUD	
14	579 52 57 01	2	WASHER	
15	579 52 59 01	2	RING FASTENER	
16	577 52 58 01	2	RUBBER GAITERS	
17	579 24 88 01	2	COLUMN, kit	
18	503 22 66 01	2	SQUARE NUT	17
19	535 14 32 01	2	DEFLECTION LIMITER	
20	574 48 03 01	1	SWITCH	
21	574 87 47 06	1	SEALING STRIP	11
21	581 90 32 02	1	SEALING STRIP 10 PCS	
22	579 45 88 01	2	LOCKING PLATE	
23	579 45 84 01	1	GEAR WHEEL	
24	576 24 22 01	2	SPRING	
25	579 50 50 01	1	BRACKET	
26	575 54 33 14	2	SCREW	
27	579 50 50 02	1	BRACKET	
28	575 54 33 14	2	SCREW	
29	581 62 07 01	1	SUPPORT KIT	
30	580 35 45 01	2	CLIP	29
31	575 54 33 14	3	SCREW	
32	580 35 23 01	2	DAMPER	29
33	578 12 71 01	1	PRINTED CIRCUIT ASSY	
34	577 75 37 01	1	AIR KIT (10 pcs)	35
35	581 62 08 01	1	CHASSIS KIT	
36	574 87 47 05	1	SEALING STRIP	35
36	581 90 32 01	1	SEALING STRIP 10 PCS	
37	574 45 01 01	6	SCREW ITXPANT	
38	580 68 29 01	2	HOLDER	
39	579 66 91 01	1	PRINTED CIRCUIT ASSY	
40	575 54 33 14	4	SCREW	
41	581 66 09 01	1	LOOM KIT	
43	581 62 11 01	1	LOOM KIT	
44	900 23 87 08	2	TIE WRAP	43
45	579 70 62 01	1	LOOM	
46	575 54 33 14	6	SCREW	57
47	579 48 47 01	2	SEAT	57
48	900 23 87 08	2	TIE WRAP	57
49	579 48 46 01	2	JOYSTICK	57
50	720 12 77 06	2	PARALLEL PIN	57
51	503 22 66 01	2	SQUARE NUT	51, 57
52	579 66 90 01	2	PRINTED CIRCUIT ASSY	
53	583 94 33 01	2	ROD KIT	57
54	580 67 25 01	2	SPRING	57
55	579 48 48 01	2	RETAINER	57
56	579 47 46 01	2	BELLOWS	
57	581 62 09 01	2	JOYSTICK KIT	
58	579 52 57 01	2	WASHER	
59	580 52 67 01	2	STUD	
60	574 45 01 01	14	SCREW ITXPANT	
61	579 66 91 01	1	PRINTED CIRCUIT ASSY	
62	579 70 63 01	1	BUZZER	
63	575 54 33 14	2	SCREW	

C AUTOMOWER 320
CHASSIS LOWER

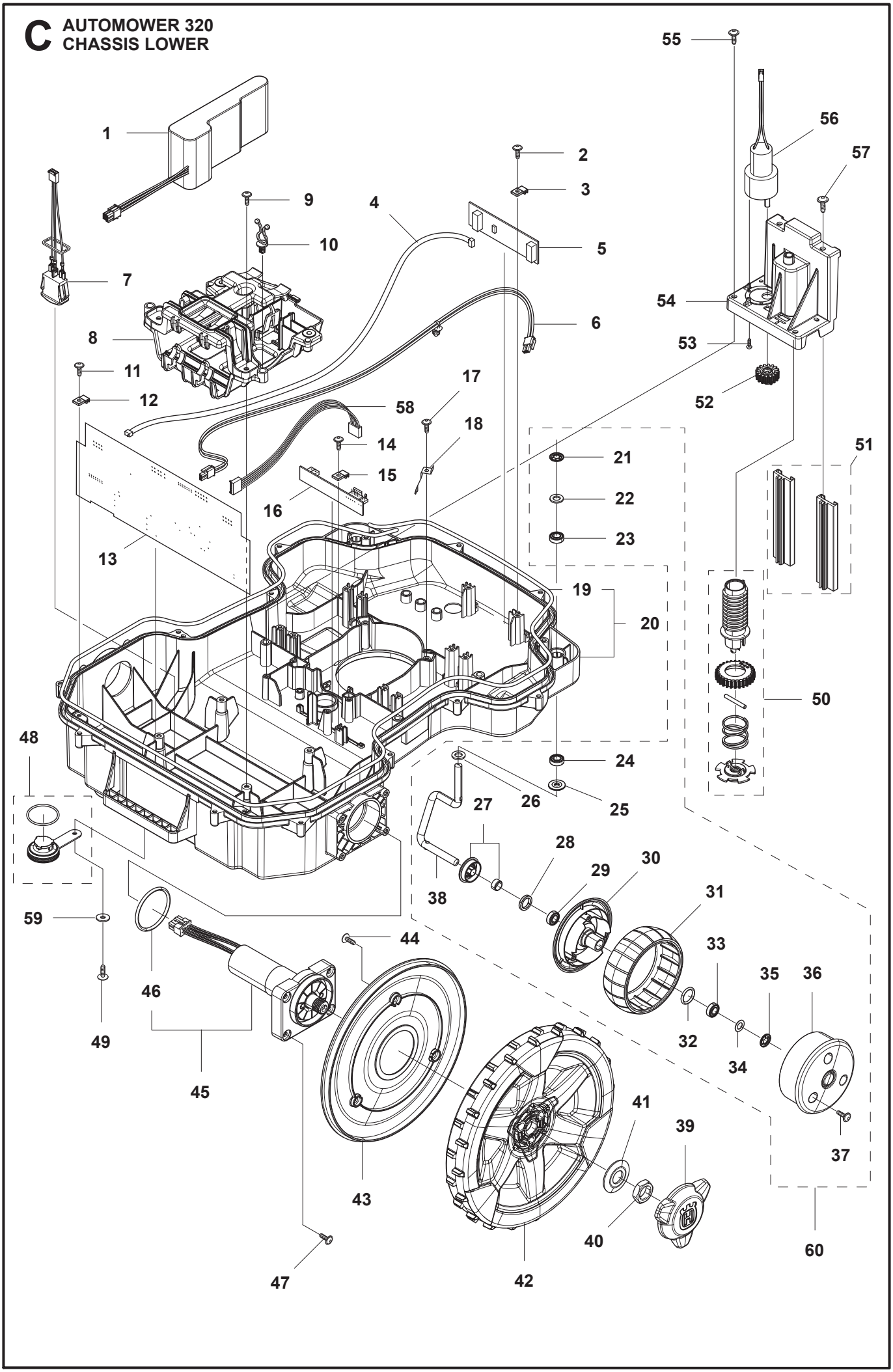

Page C 320			CHASSIS LOWER	
Position	**Article**	**Quantity**	**Notes**	**Kit**
1	580 68 33 01	1	BATTERY	
2	575 54 33 14	2	SCREW	
3	579 52 94 01	2	CLAMP	
4	579 70 82 01	1	LOOM	
5	579 66 02 01	1	PRINTED CIRCUIT ASSY	
6	580 37 07 01	1	LOOM	
7	579 70 87-01	1	SWITCH, On Off	
8	580 60 96 01	1	HOLDER	
9	574 45 01 01	5	SCREW ITXPANT	
10	580 68 29 01	7	HOLDER	
11	575 54 33 14	2	SCREW	
12	579 52 94 01	2	CLAMP	
13	578 42 54 01	1	PRINTED CIRCUIT ASSY	
14	575 54 33 14	1	SCREW	
15	579 52 94 01	1	CLAMP	
16	579 72 85 01	1	PRINTED CIRCUIT ASSY	
17	575 54 33 14	2	SCREW	
18	581 55 61 01	2	SPRING	
19	574 87 47 05	1	SEALING STRIP	
19	581 90 32 01	1	SEALING STRIP 10 PCS	
20	581 62 17 01	1	CHASSIS KIT	
21	576 01 93 01	2	LOCK WASHER	60
22	580 76 46 01	2	WASHER	60
23	580 60 51 01	2	BALL BEARING	60
24	580 60 51 01	2	BALL BEARING	60
25	535 08 78 03	2	WASHER	60
26	580 76 46 01	2	WASHER	60
27	581 62 15 01	2	SHEILD KIT	60
28	580 48 71 01	2	SEALING	60
29	580 60 51 01	2	BALL BEARING	60
30	579 45 71 01	2	WHEEL	60
31	574 44 98 01	2	WHEEL	60
32	580 44 51 01	2	O-RING	60
33	580 60 51 01	2	BALL BEARING	60
34	580 76 46 01	2	WASHER	60
35	576 01 93 01	2	LOCK WASHER	60
36	579 45 72 01	2	WHEEL	60
37	575 54 33 14	6	SCREW	60
38	580 33 61 01	2	SPINDLE	60
39	579 50 55 01	2	HUB CAP	
40	731 43 24 01	2	HEXAGON THIN NUT	
41	580 41 21 01	2	SPRING WASHER	
42	579 50 60 01	2	REAR WHEEL	
43	579 50 56 01	2	COVER	
44	575 54 33 14	6	SCREW	
45	581 62 13 01	2	MOTOR KIT	
46	580 44 39 01	2	O-RING	45
47	574 45 01 01	8	SCREW ITXPANT	
48	581 62 12 01	1	PLUG KIT	
49	575 54 33 14	1	SCREW	
50	581 62 16 01	1	SCREW KIT	
51	581 62 18 01	1	BEARING KIT	
52	579 56 47 01	1	GEAR	
53	510 01 87 03	3	SCREW	
54	579 56 51 01	1	HOUSING	
55	575 54 33 14	4	SCREW	
56	580 34 21 01	1	MOTOR	
57	510 72 29 01	2	SCREW ITXPANT	
58	579 70 80 01	1	LOOM	
59	734 11 37 41	1	WASHER	
60	581 62 14 01	2	WHEEL ASSY	

D AUTOMOWER 320
BLADE MOTOR & CUTTING EQUIPMENT

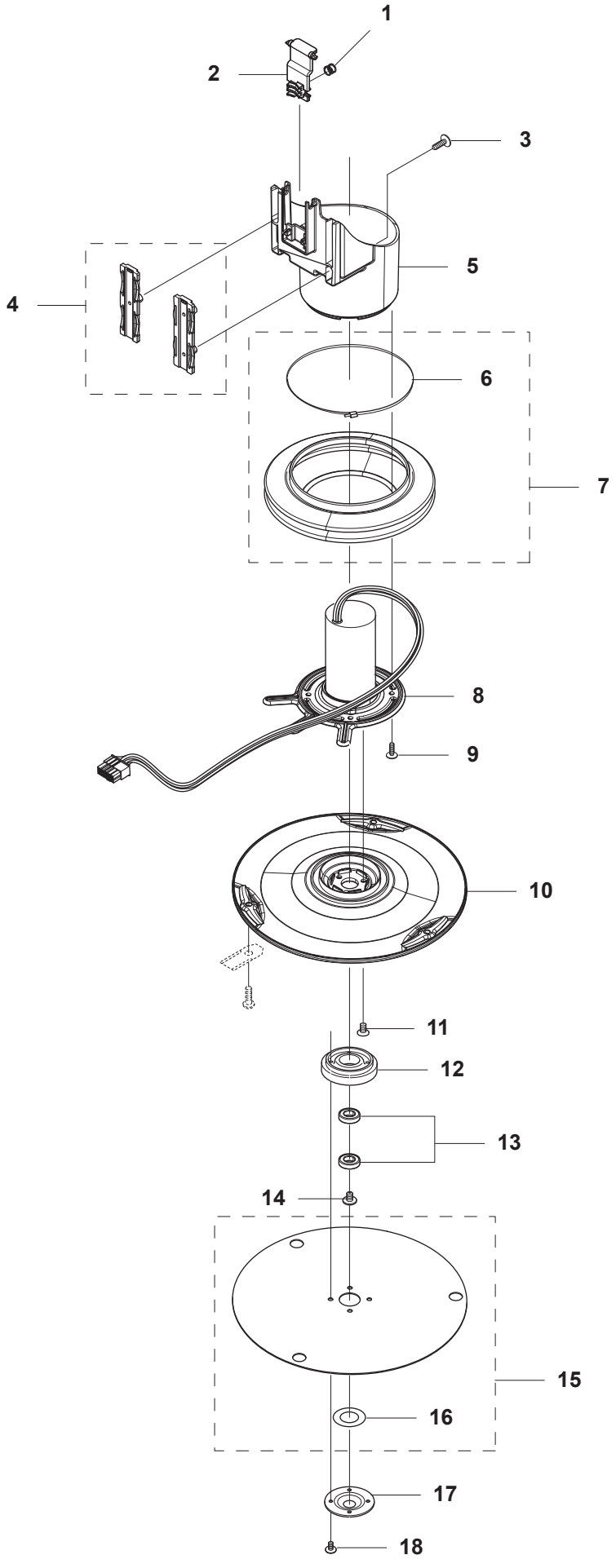

Page D 320			BLADE MOTOR & CUTTING EQUIPMENT	
Position	**Article**	**Quantity**	**Notes**	**Kit**
1	580 62 44 01	1	SPRING	
2	579 56 46 01	1	LINK	
3	575 54 33 14	3	SCREW	
4	581 62 18 01	1	BEARING KIT	
5	579 56 45 01	1	HOUSING	
6	580 75 41 01	1	TIE WRAP	7
7	581 62 21 01	1	BELLOWS KIT	
8	580 23 48 01	1	MOTOR ASSY	
9	575 54 33 14	4	SCREW	
10	580 79 30 02	1	CUTTING DISC	
11	535 13 05 01	3	SCREW	
12	535 12 64 01	1	BEARING BOX	
13	535 07 57 02	2	BALL BEARING	
14	535 07 60 01	1	SCREW	
15	581 62 19 01	1	PLATE KIT	
16	535 08 25 01	1	GASKET	15
17	535 08 15 01	1	COVER WASHER	
18	575 54 33 10	4	SCREW	

E AUTOMOWER 320 CHARGING STATION

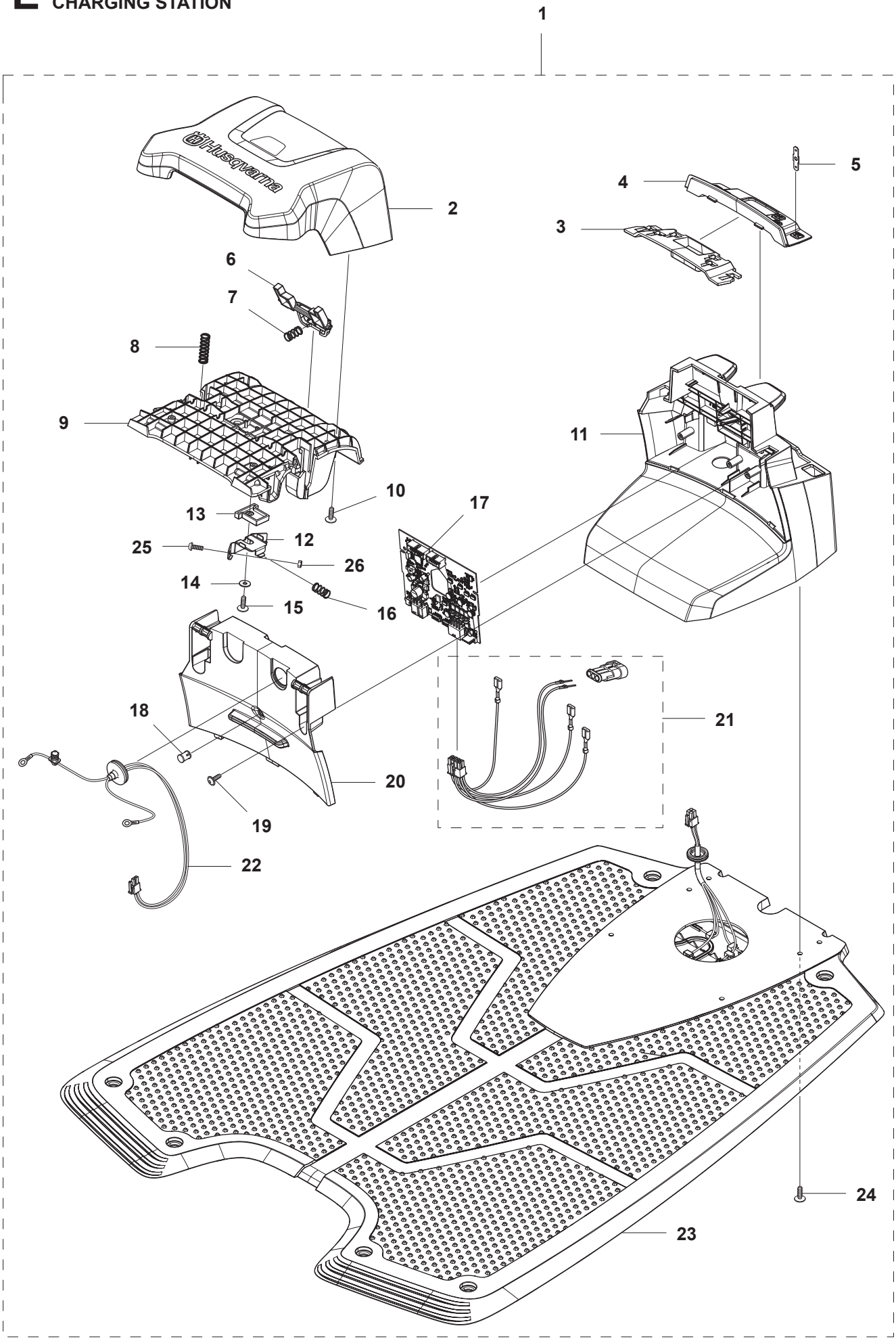

Page E 320			CHARGING STATION	
Position	**Article**	**Quantity**	**Notes**	**Kit**
1	580 76 55 01	1	CHARGING STATION	
2	579 44 82 02	1	CAP	1
3	579 45 99 01	1	HOLDER	1
4	579 45 98 01	1	PANEL	1
5	580 50 41 01	3	TERMINAL	1
6	579 46 24 01	1	BUTTON	1
7	574 48 70 01	1	SPRING	1
8	580 51 14 01	2	SPRING	1
9	579 45 80 01	1	FRAME	1
10	575 54 33 14	4	SCREW	1
11	579 46 23 01	1	HOUSING	1
12	579 54 30 01	2	CHARGING PLATE	1
13	579 46 05 01	2	DISTANCE	1
14	734 11 37 41	2	WASHER	1
15	575 54 33 14	2	SCREW	1
16	580 51 14 01	2	SPRING	1
17	579 56 55-01	1	PRINTED CIRCUIT ASSY	1
18	535 12 87 02	1	DIODE LENS	1
19	575 54 33 14	2	SCREW	1
20	579 45 97 02	1	LID	1
21	581 62 23 01	1	LOOM KIT	1
22	579 70 85 01	1	LOOM	1
23	575 23 16 01	1	CHARGING PLATE	1
24	575 54 33 14	4	SCREW	1
25	576 21 38 01	2	SCREW ITXPANM	1
26	732 25 12 01	2	HEXAGON LOCKING NUT	1

F AUTOMOWER 320 ACCESSORIES

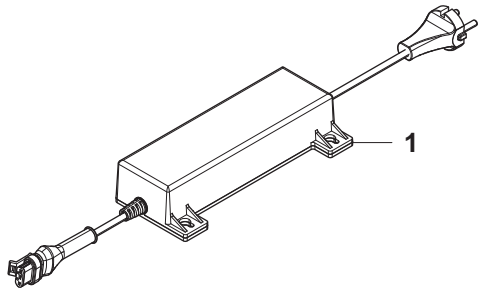

1

2

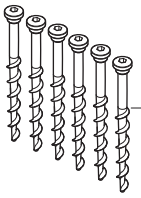

3

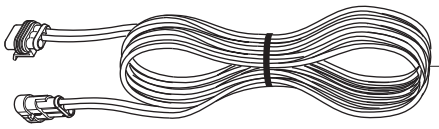

4

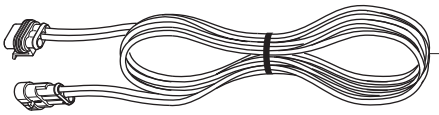

5

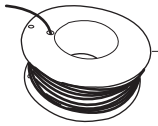

7

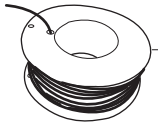

8

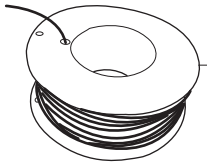

9

10

11

12

13

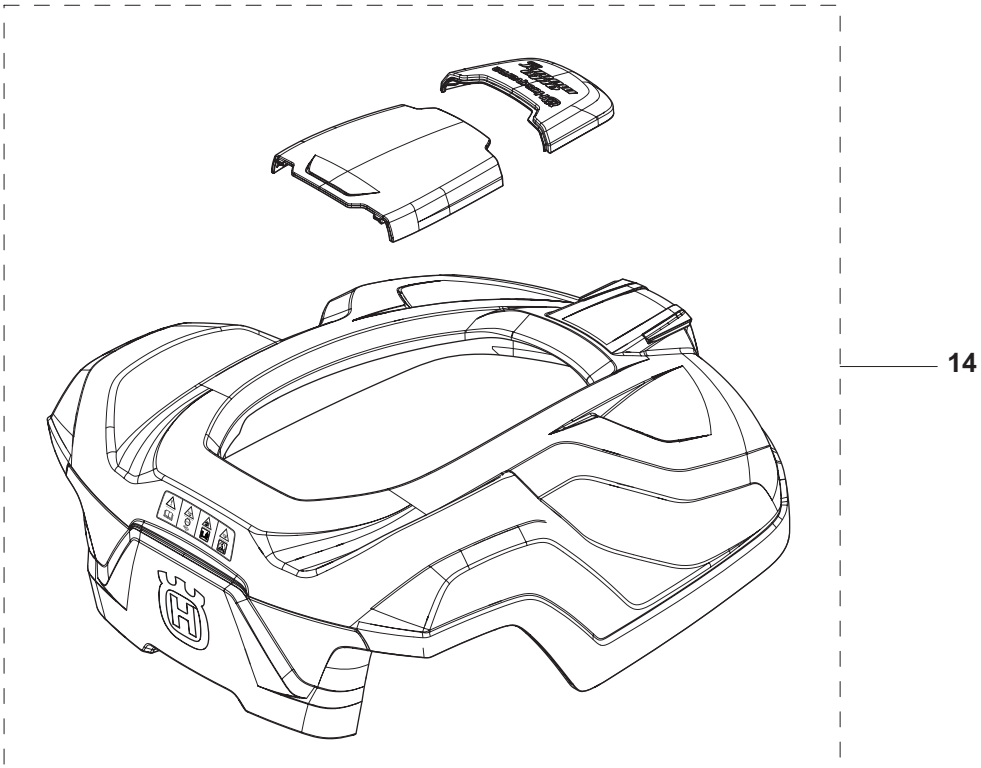

14

Page F 320			ACCESSORIES	
Position	**Article**	**Quantity**	**Notes**	**Kit**
1	580 38 07-01	1	TRANSFORMER (EU)	
1	580 38 07-02	1	TRANSFORMER (UK/IRL)	
1	580 38 07-03	1	TRANSFORMER (CH)	
1	580 38 07-04	1	TRANSFORMER (US/MX)	
1	580 38 07-05	1	TRANSFORMER (AU/NZ)	
2	504 04 97-01	1	STAPLE, 100pcs	
2	577 86 42-01	1	STAPLE, Blister pack, 100pcs	
3	575 23 86-01	1	SCREW KIT, 6pcs	
3	577 86 49-01	1	SCREW KIT, Blister Pack, 3pcs	
4	580 43 38-01	1	WIRING (20m)	
5	580 43 38-02	1	WIRING (10m)	
7	501 98 03-02	1	WIRE (150m)	
7	577 86 43-01	1	WIRE, Blister pack, (150m)	
8	501 98 03-01	1	WIRE (250m)	
9	522 91 41-01	1	WIRE (500m, Ø3.4 mm)	
10	535 12 90-01	1	Loop Wire Connector	
10	577 86 48-01	1	Loop Wire Connector, Blister Pack, 5pcs	
11	501 98 02-01	1	COUPLER	
11	577 86 47-01	2	COUPLER, Blister pack, 5pcs	
11	501 98 02-02	1	COUPLER, 50pcs	
12	544 17 75-01	1	MEASURING TAPE	
13	579 57 12-01	1	LABEL	
14	580 96 56-01	1	BODY KIT White	

G AUTOMOWER 320 ACCESSORIES

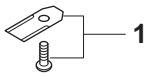
1

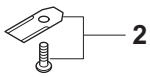
2

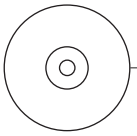
3

4

12

13

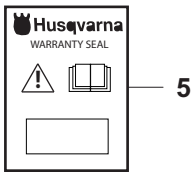

5

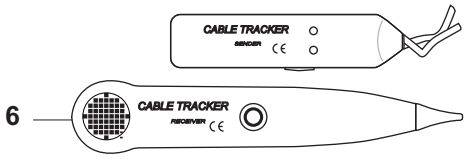

6

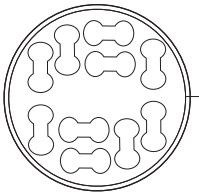
7

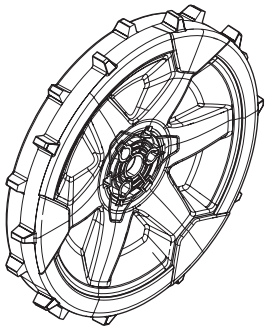
9

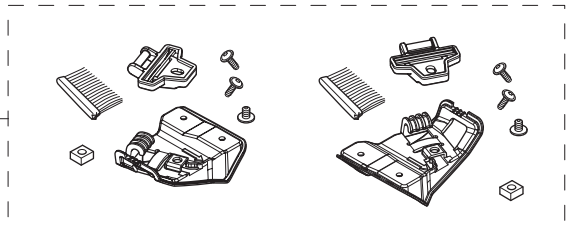
8

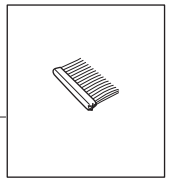
10

11

Page G 320			ACCESSORIES	
Position	**Article**	**Quantity**	**Notes**	**Kit**
1	535 13 87-02	1	BLADE, Carbon steel, 9pcs	
1	577 86 44-01	1	BLADE, Carbon steel, Blister Pack, 9pcs	
1	535 13 88-02	1	BLADE, Carbon steel, 30pcs	
1	505 12 78-02	1	BLADE, Carbon steel, 500pcs	
2	577 60 64-02	1	BLADE, Carbon steel, Thick, 9pcs	
2	577 86 46-01	1	BLADE, Carbon steel, Thick, Blister Pack, 9pcs	
2	577 60 65-02	1	BLADE, Carbon steel, Thick, 30pcs	
2	577 60 66-02	1	BLADE, Carbon steel, Thick, 300pcs	
3	577 85 81-02	1	Autocheck EXP DVD	
4	577 51 81-01	1	Service cable (USB)	
5	580 68 95-02	1	Warranty Seal 1pcs	
5	584 90 22-01	1	Warranty Seal 10pcs	
6	577 60 68-01	1	Interruption detector	
7	581 84 28-01	1	STICKER, Cable markers	
8	581 88 97-01	1	REAR WHEEL, Kit Incl. Brush kit	
9	581 90 31-01	1	BRUSH KIT, Incl Brush, 6pcs	
10	581 98 20-01	1	BRUSH, 6pcs	
11	522 91 67-01	1	BAG	
12	115 49 23-01	1	OPERATOR'S MANUAL, Swedish	
12	115 49 23-26	1	OPERATOR'S MANUAL, English	
12	115 49 23-31	1	OPERATOR'S MANUAL, French	
12	115 49 23-36	1	OPERATOR'S MANUAL, Dutch	
12	115 49 23-41	1	OPERATOR'S MANUAL, Italian	
12	115 49 23-46	1	OPERATOR'S MANUAL, Spanish	
12	115 49 23-51	1	OPERATOR'S MANUAL, German	
12	115 49 23-58	1	OPERATOR'S MANUAL, Hungarian	
12	115 49 23-59	1	OPERATOR'S MANUAL, Portuguese	
12	115 49 23-61	1	OPERATOR'S MANUAL, Polish	
12	115 49 23-68	1	OPERATOR'S MANUAL, Slovak	
12	115 49 23-84	1	OPERATOR'S MANUAL, Slovenian	
12	115 49 23-90	1	OPERATOR'S MANUAL, Czech	
13	115 49 25-01	1	QUICK GUIDE, Swedish	
13	115 49 25-26	1	QUICK GUIDE, English	
13	115 49 25-31	1	QUICK GUIDE, French	
13	115 49 25-36	1	QUICK GUIDE, Dutch	
13	115 49 25-41	1	QUICK GUIDE, Italian	
13	115 49 25-46	1	QUICK GUIDE, Spanish	
13	115 49 25-51	1	QUICK GUIDE, German	
13	115 49 25-58	1	QUICK GUIDE, Hungarian	
13	115 49 25-59	1	QUICK GUIDE, Portuguese	
13	115 49 25-61	1	QUICK GUIDE, Polish	
13	115 49 25-68	1	QUICK GUIDE, Slovak	
13	115 49 25-84	1	QUICK GUIDE, Slovenian	
13	115 49 25-90	1	QUICK GUIDE, Czech	