Husqvarna

Parts Manual

WHF5223 / 966947006

WHF6123 / 966947007

Please read the operator's manual carefully and make sure you understand the instructions before using the machine.

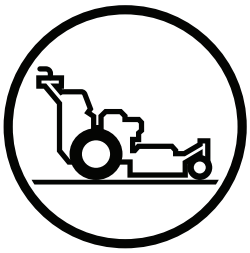

English

©2009 HTC. All rights reserved.
Beatrice, NE. Printed in U.S.A.

CONTENTS

FRAME 4
ENGINE 6
HANDLE AND CONTROLS 8
PARKING BRAKE 10
HYDRO PUMP-MOTOR 12
WHEELS AND TIRES 14
52" MOWER DECK 16
61" MOWER DECK 18
DECALS 20

NOTE: ALL FASTENERS ARE GRADE 5 UNLESS OTHERWISE SPECIFIED.

FRAME

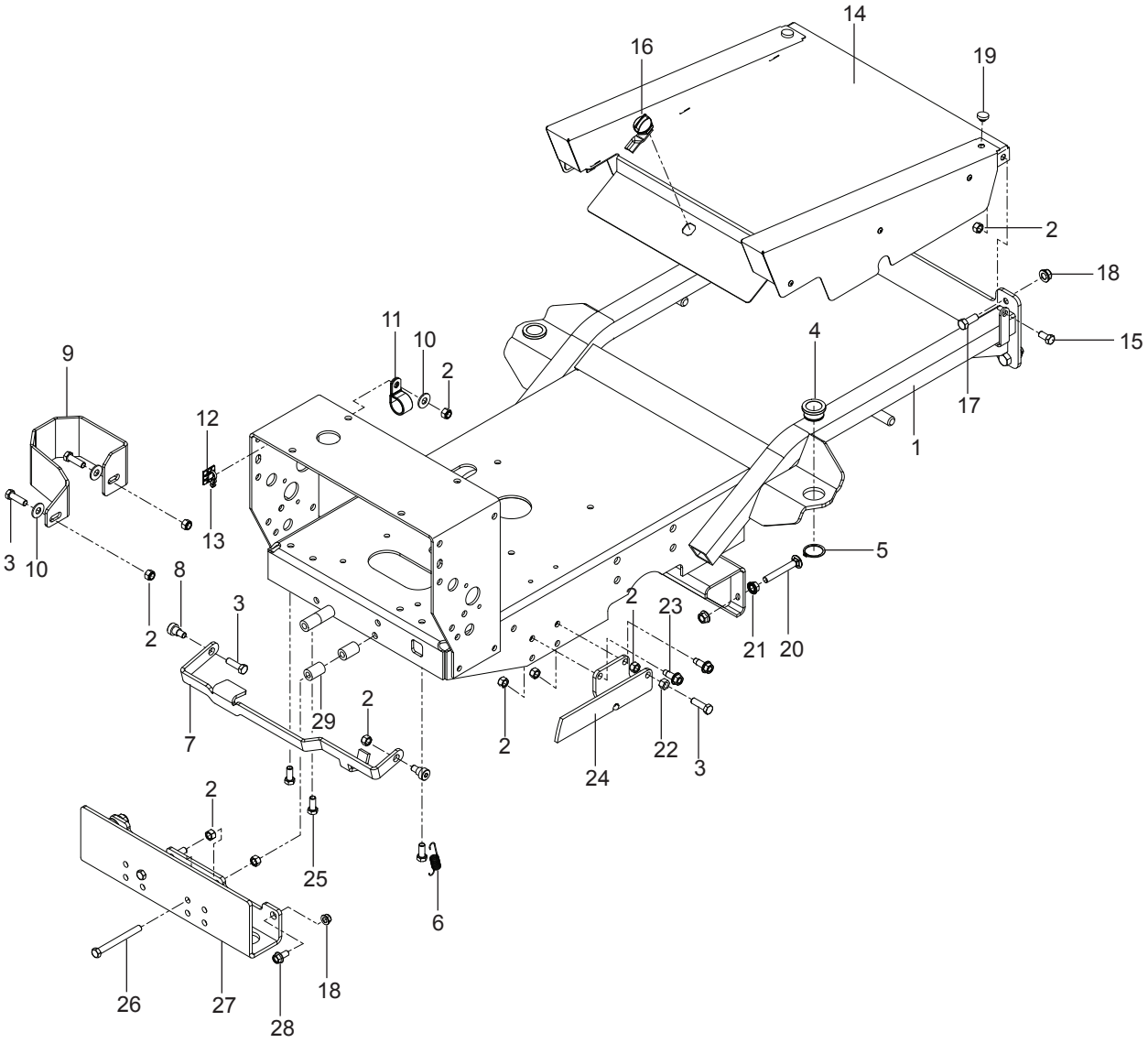
14
16
19
2
18
15
11
10
2
4
9
17
12
1
13
3
10
5
8
2
3
2
23
21
20
29
2
7
2
22
3
24
2
25
6
26
27
28
18

FRAME

ITEM	PART NO.	QTY.	DESCRIPTION
1..	525 811402	1	CHASSIS
2..	539 976979	11	NUT 3/8-16 HEX NYLOC
3..	539 976941	3	HCS 3/8-16 x 1¼
4..	525 344001	2	BUSHING, HOC
5..	522 989201	2	RING, SNAP
6..	510 206101	1	SPRING, EXTENSION
7..	525 851002	1	BAR, THROW OUT
8..	539 113621	2	SB 3/8-16 x 3/8 SKT HD
9..	505 189002	1	GUARD, FILTER
10..	539 990517	3	WASHER 3/8 FLAT
11..	539 107891	1	CLIP
12..	539 110863	1	MOUNTING BLOCK
13..	539 976856	2	WIRE TIE
14..	523 031601	1	COVER, CENTER
15..	539 990134	2	HCS 3/8-16 x ¾
16..	510 126701	1	LATCH, SHORT WING
17..	539 108369	4	HCS ½-13 x 1¼
18..	521 991101	4	NUT ½ HEX FLG NYLOC
19..	539 102587	2	GROMMET
20..	539 130325	2	RHSNB 3/8-16 x 2¾
21..	539 990613	4	NUT 3/8-16 HEX WHIZLK
22..	539 990130	1	NUT 3/8-16 HEX
23..	539 107476	2	BOLT 3/8-16 x 1 THD FRM
24..	522 983402	1	PLATE, SUPPORT
25..	539 108507	3	HCS 3/8-16 x 7/8
26..	539 991126	1	HCS 3/8-16 x 3¾
27..	574 311502	1	BUMPER
28..	574 210601	2	HFFS ½-13 x 1
29..	539 103543	4	SPACER

ENGINE

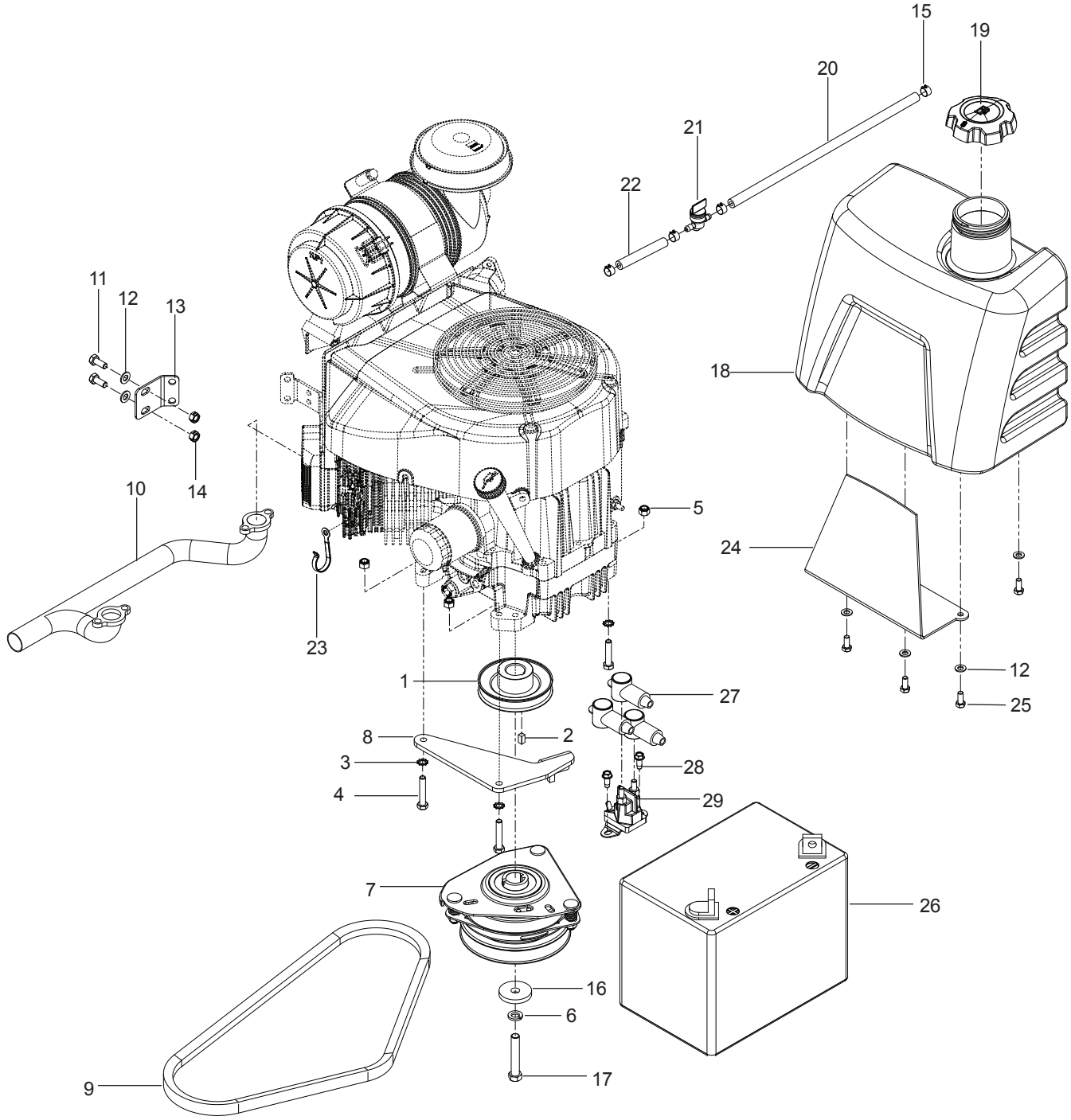
15
19
20
21
22
11
12
13
18
14
10
5
24
23
1
12
27
25
8
2
3
28
4
29
7
26
16
6
17
9

ENGINE

ITEM	PART NO.	QTY.	DESCRIPTION
1..	539 132525....	1....	PULLEY
2..	539 105718....	1....	KEY ¼ SQ x ½
3..	539 109556....	4....	LOCK WASHER 5/16 STAR
4..	539 990669....	2....	HCS 5/16-18 x 1¾
5..	539 990717....	4....	NUT 5/16-18 HEX NYLOC
6..	539 990247....	1....	WASHER 7/16 SLW
7..	532 400008....	1....	CLUTCH 90 FT/LB
8..	539 132527....	1....	CLUTCH STOP
9..	539 106725....	1....	BELT
10..	539 110348....	1....	MANIFOLD, EXHAUST
11..	539 990206....	2....	HCS 5/16-18 x ¾
12..	539 990188....	6....	WASHER 5/16 SAE FLAT
13..	539 110372....	1....	BRACKET, MUFFLER
14..	539 990184....	2....	NUT 5/16-18 HEX CNTRLK
15..	539 912222....	4....	CLAMP
16..	539 106504....	1....	WASHER, HEAVY
17..	539 991120....	1....	HCS 7/16-20 x 2½
18..	539 132549....	1....	TANK, FUEL
19..	539 130393....	1....	CAP, FUEL TANK
20..	539 108212....	1....	FUEL LINE, 12"
21..	539 916325....	1....	VALVE, FUEL
22..	505 296701....	1....	FUEL LINE, 3½"
23..	539 107098....	1....	CLAMP
24..	539 132633....	1....	PLATE
25..	539 976934....	4....	HCS 5/16-18 x ¾
26..	539 102436....	1....	BATTERY, DRY
27..	539 102759....	3....	INSULATOR
28..	539 990362....	2....	SCREW ¼-20 x 5/8 SLF TAP
29..	539 101714....	1....	SOLENOID

HANDLE AND CONTROLS

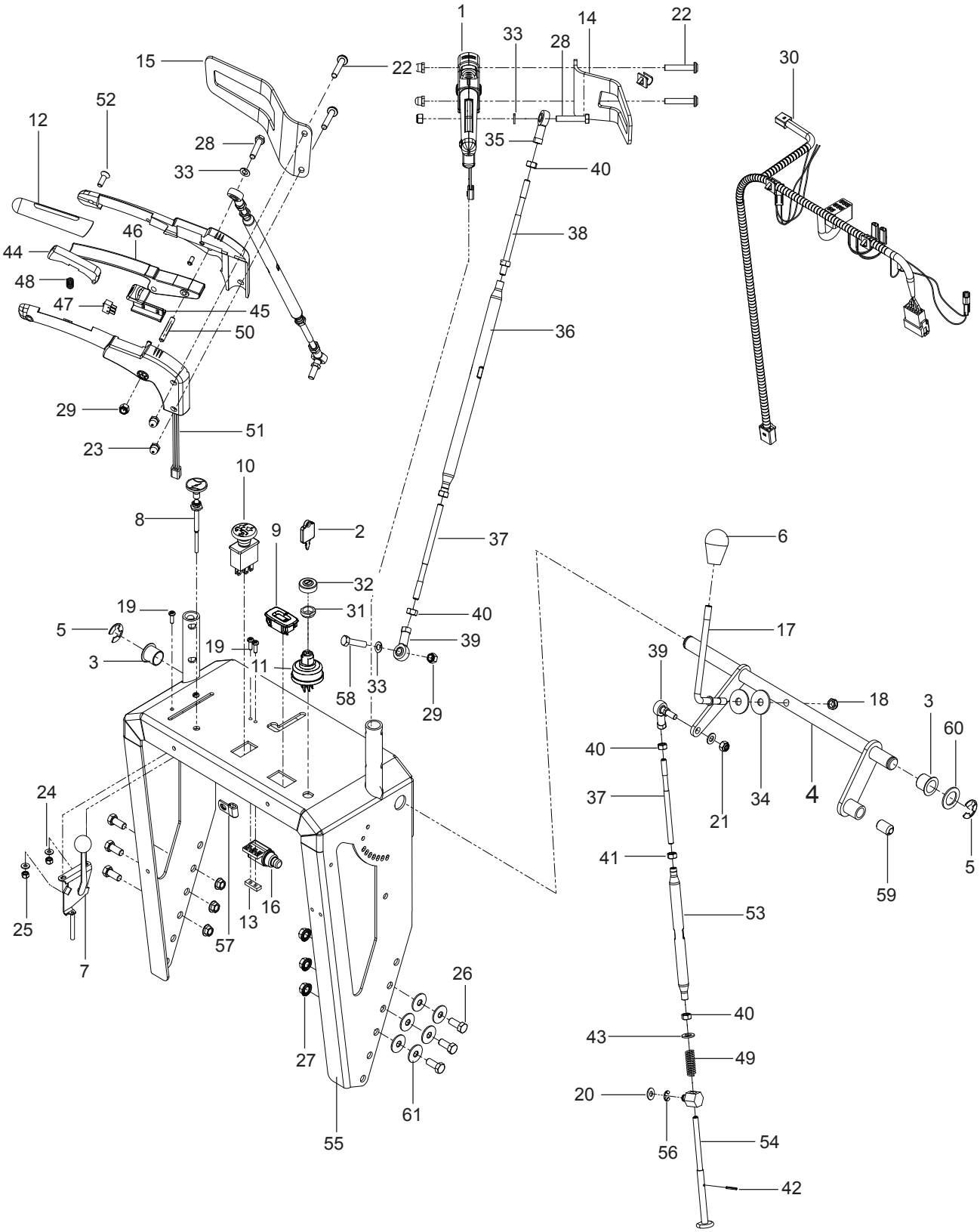

HANDLE AND CONTROLS

ITEM	PART NO.	QTY.	DESCRIPTION
1..	539 132623	2	GRIP ASSEM
2..	539 104812	2	KEY
3..	539 132520	2	BEARING, FLANGE
4..	574 454301	1	SPEED CONTROL
5..	539 132629	2	E RING, 20MM
6..	539 132624	1	KNOB, SHIFT
7..	539 132688	1	CONTROL, THROTTLE
8..	539 130208	1	CONTROL, CHOKE
9..	539 110074	1	METER, HOUR
10..	539 101768	1	SWITCH, CLUTCH
11..	539 101770	1	SWITCH, IGNITION
12..	522 950501	2	GRIP, FOAM
13..	539 102678	1	PLATE, NUT
14..	522 421802	1	GUARD, HAND RH
15..	522 421702	1	GUARD, HAND LH
16..	522 559601	1	SWITCH
17..	522 676001	1	ROD, SHIFT
18..	539 200282	1	NUT 3/8-16 HEX JAM NYLOC
19..	539 990411	4	SCREW #10-24 x ½ HEX
20..	539 990122	1	WASHER 3/8 SAE FLAT
21..	539 103153	1	NUT M8 x 1.25 NYLOC
22..	525 841401	4	HHFS 5/16-18 x 1¾
23..	505 203401	4	NUT, ACORN 5/16-18
24..	539 105408	2	WASHER #10 FLAT
25..	539 976977	2	NUT #10-24 HEX NYLOC
26..	539 108507	6	HCS 3/8-16 x 7/8
27..	539 990613	6	NUT 3/8-16 HEX WHIZLK NYL
28..	539 990669	2	HCS 5/16-18 x 1¾
29..	539 990717	2	NUT 5/16-18 HEX NYLOC
30..	522 823901	1	HARNESS, UPPER HANDLE
31..	539 103177	1	NUT, IGNITION SWITCH
32..	539 103178	1	CAP, IGNITION SWITCH NUT
33..	539 990187	4	WASHER 5/16 SLW
34..	539 912063	2	WASHER, CONE
35..	539 132602	4	ROD END 8 MM, RH
36..	539 132601	2	TUBE, ADJUSTING
37..	539 132605	3	STUD, LH
38..	539 132604	2	STUD, RH
39..	539 132603	1	ROD END 8 MM
40..	539 132607	8	NUT .8MM x 1.25 HEX
41..	510 098701	3	NUT .8MM x 1.25 LH
42..	539 132614	1	ROLL PIN 3 MM
43..	510 098601	1	WASHER, 10 MM
44..	539 132674	2	ACTUATOR, OPC
45..	539 132617	2	LOCK, NEUTRAL
46..	539 132618	2	LEVER
47..	539 132620	2	SWITCH
48..	539 132599	2	SPRING
49..	539 101224	1	SPRING
50..	539 132635	2	PIN, GROOVE ¼ x 1½
51..	539 132675	2	HARNESS, SWITCH
52..	539 132677	2	SCREW, OVAL HEAD 6MM
53..	539 132609	1	TUBE, ADJUSTING
54..	539 132608	1	ROD, HEADED
55..	522 478101	1	UPPER HANDLE w/DECAL
56..	539 132613	1	E-RING, 10MM
57..	539 109867	1	CLAMP
58..	539 100469	2	HCS 5/16-18 x 1¼
59..	574 454601	1	DETENT
60..	539 923787	1	BUSHING
61..	539 112483	12	WASHER, SPRING
NOT SHOWN			
	523 031501	1	HARNESS, LOWER

PARKING BRAKE

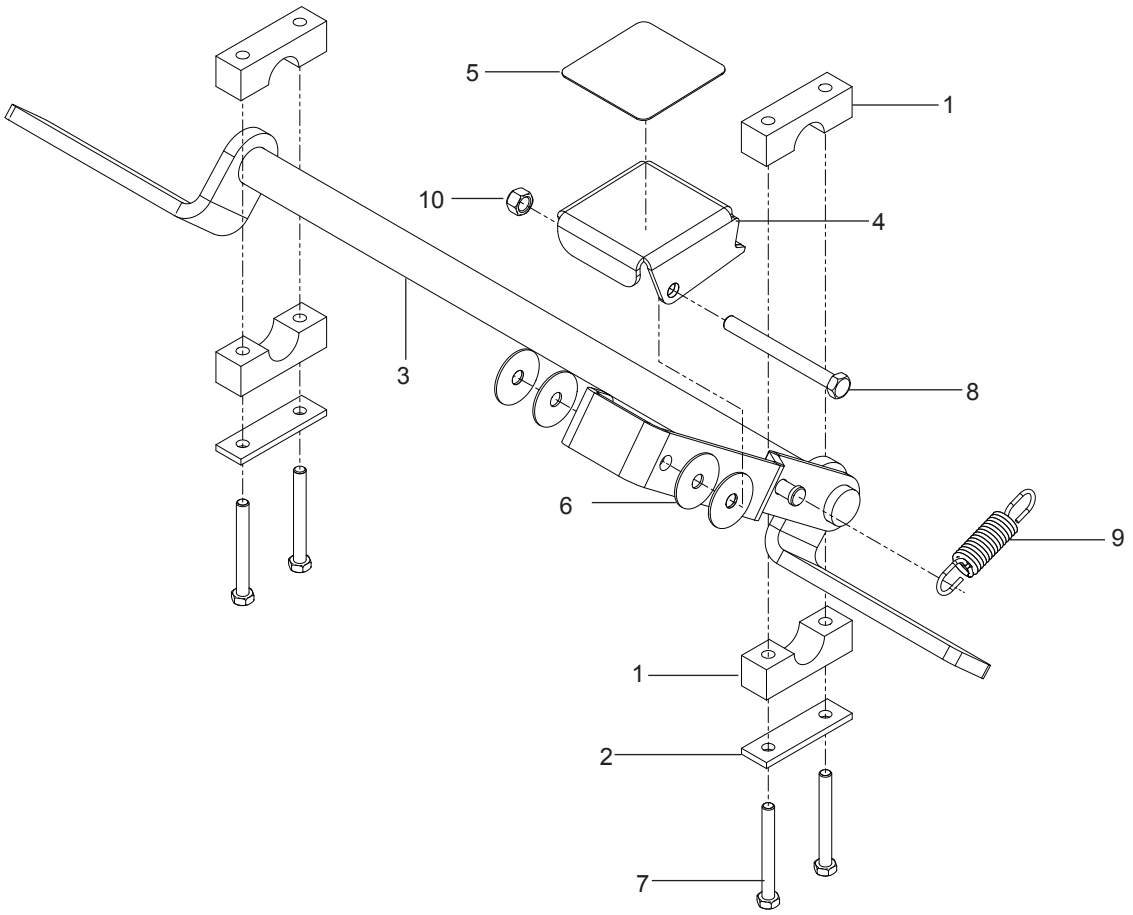

PARKING BRAKE

ITEM	PART NO.	QTY.	DESCRIPTION
1..	539 104808....	4....	PILLOW BLOCK
2..	539 104807....	2....	BAR, REINFORCEMENT
3..	539 132685....	1....	BRAKE ASSEM
4..	510 283402....	1....	PEDAL
5..	539 105187....	1....	PAD, ANTI-SKID
6..	539 102998....	4....	WASHER, FRICTION
7..	539 101721....	4....	HCS $^{5}/_{16}$-18 x 2¾
8..	539 991126....	1....	HCS $^{3}/_{8}$-16 x 3¾
9..	510 136301....	1....	SPRING, EXTENSION
10..	539 976979....	1....	NUT $^{3}/_{8}$-16 HEX NYLOC

HYDRO PUMP-MOTOR

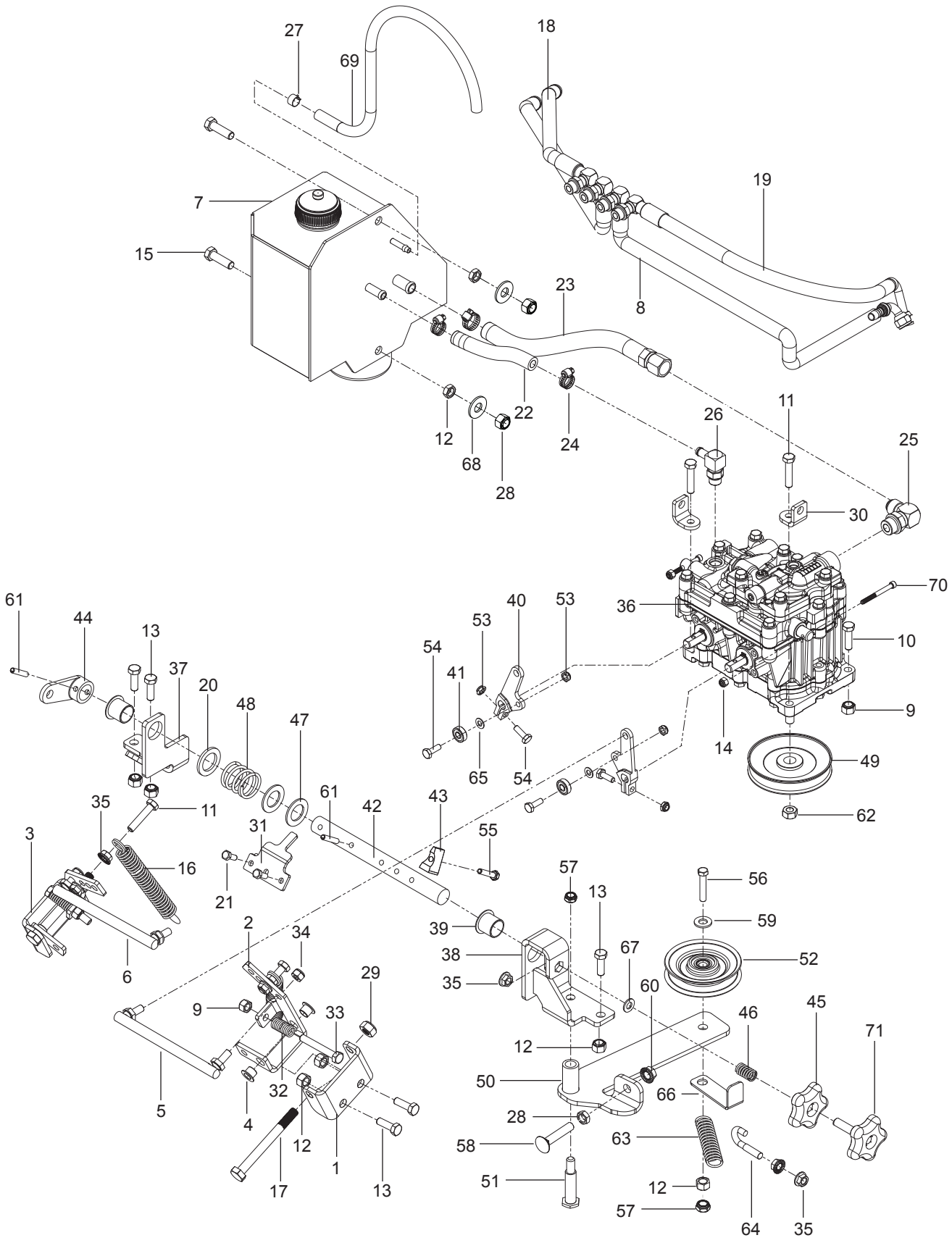

HYDRO PUMP-MOTOR

ITEM	PART NO.	QTY.	DESCRIPTION
1..	539 132535	2	U BRACKET
2..	539 132537	1	BELLCRANK, RH
3..	539 132539	1	BELLCRANK, LH
4..	539 132533	4	BEARING, FLANGE
5..	539 132550	1	LINK, CONTROL, RH
6..	539 132551	1	LINK, CONTROL, LH
7..	573 944101	1	RESERVOIR
8.	523 090601	1	HOSE, RT RR
9..	539 990717	2	NUT 5/16-18 HEX NYLOC
10..	539 990627	2	HCS 5/16-18 x 1¼
11..	539 976935	4	HCS 5/16-18 x 1½
12..	539 976979	8	NUT 3/8-16 HEX NYLOC
13..	539 108507	7	HCS 3/8-16 x 7/8
14..	539 976977	2	NUT #10-24 HEX NYLOC
15..	539 976941	2	HCS 3/8-16 x 1¼
16..	539 916159	2	SPRING
17..	510 129901	2	HCS M10-1.5 x 100 GR 8.8
18..	523 090701	2	HOSE, LH
19..	523 090501	1	HOSE, RT FRT
20..	510 362801	1	WASHER, FIBER
21..	539 107705	2	HCS M6-1.0 x 16MM GR 8.8
22..	505 280201	1	HOSE, RETURN
23..	505 280101	1	HOSE, SUCTION
24..	539 976966	3	CLAMP, HOSE
25..	539 101242	1	ELBOW 90°
26..	505 280401	1	FITTING 90°
27..	539 912222	1	CLAMP
28..	539 109332	3	NUT 3/8-16 HEX JAM
29..	510 130001	2	NUT, M10-1.5 NYLON RING
30..	510 111002	2	BRACKET, SPRING
31..	539 132515	1	PLATE, NEUTRAL STOP
32..	539 101224	2	SPRING
33..	539 976937	2	HCS 5/16-18 x 2
34..	539 103153	4	NUT M8 x 1.25 NYLOC
35..	539 990585	7	NUT 5/16-18 HEX WHIZLK
36..	521 976001	1	PUMP, DUP10S
37..	539 132511	1	SUPPORT, CAM LH
38..	539 132513	1	SUPPORT, CAM RH
39..	539 132520	2	BEARING, FLANGE
40..	539 132516	2	ARM, HYDRO
41..	539 132523	2	BEARING, FOLLOWER
42..	539 132519	1	SHAFT, CAM
43..	539 132518	1	CAM, TRACKING
44..	539 132517	1	ARM, SPEED CONTROL
45..	522 718401	1	KNOB, ADJUSTMENT
46..	539 132687	1	SPRING, COMPRESSION
47..	539 132521	2	WASHER, 20MM
48..	539 132524	1	SPRING, COMPRESSION
49..	539 131727	1	PULLEY, PUMP
50..	539 132532	1	ARM, IDLER
51..	539 110222	1	BOLT, SHOULDER
52..	539 113683	1	V-IDLER
53..	539 108120	4	NUT ¼-20 HEX THIN NYLOC
54..	539 990580	4	HCS ¼-20 x ¾
55..	539 106307	1	HCS M6-1.0 x 30MM GR 8.8
56..	539 990588	1	HCS 3/8-16 x 2
57..	539 200282	2	NUT 3/8-16 HEX JAM NYLOC
58..	539 100145	1	RHSNB 3/8-16 x 2
59..	539 990122	1	WASHER 3/8 SAE FLAT
60..	539 990613	1	NUT 3/8-16 HEX WHIZLK
61..	505 224001	2	ROLL PIN, 6 MM x 30 MM
62..	539 131528	1	NUT, M10-1.5 L/H HEX
63..	539 010195	1	SPRING
64..	539 112896	1	J-BOLT
65..	539 103547	2	WASHER
66..	525 612702	1	KEEPER, BELT
67..	539 990188	1	WASHER 5/16 SAE FLAT
68..	539 990517	4	WASHER 3/8 FLAT
69..	539 922091	1	FUEL LINE
70..	521 976101	2	SCREW #10-24 SCKT HD
71..	522 718501	1	KNOB, ADJUSTMENT

WHEELS AND TIRES

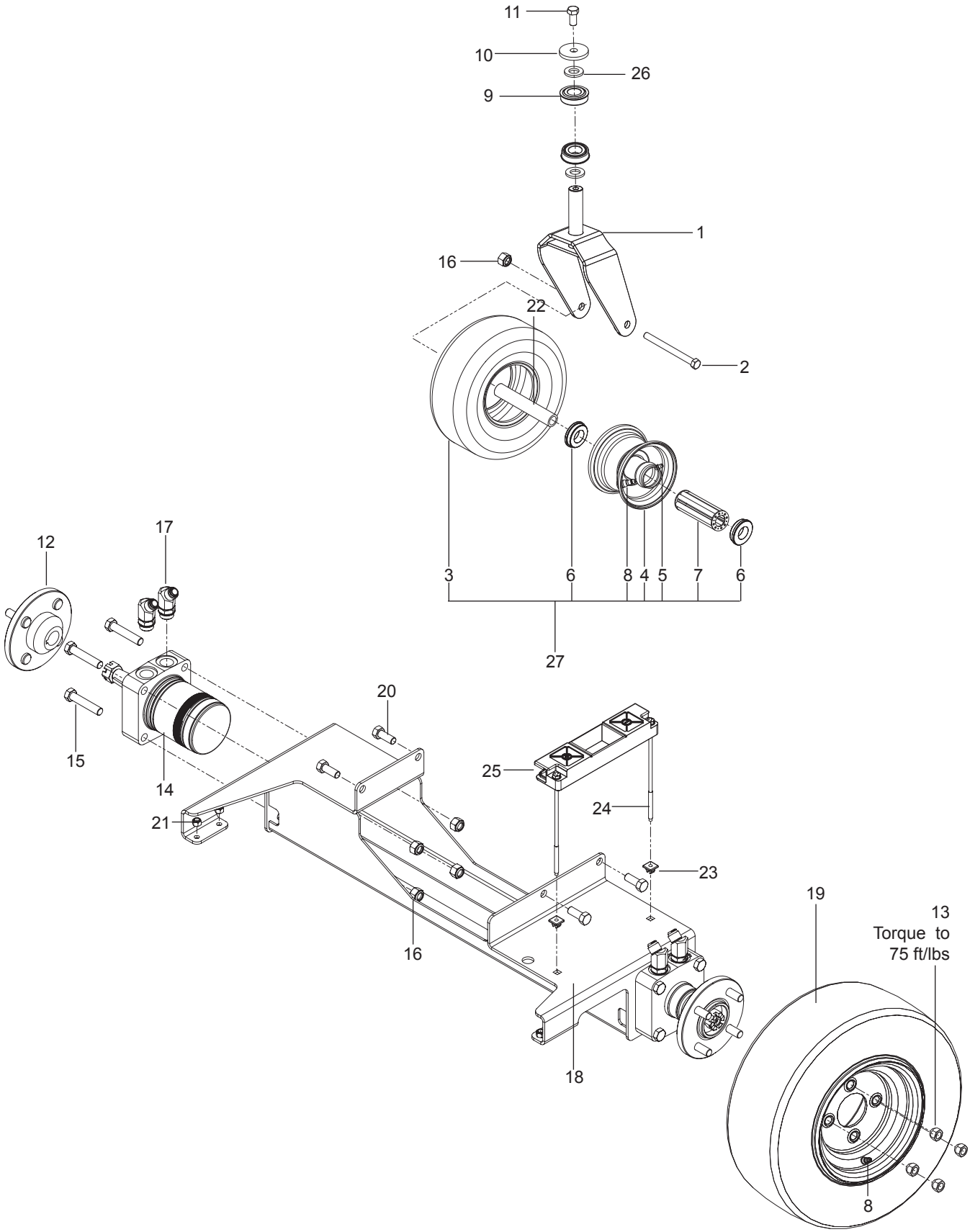

WHEELS AND TIRES

ITEM	PART NO.	QTY.	DESCRIPTION
1..	539 113444	2	CASTER FORK
2..	539 101907	2	HCS ½-13 x 5½
3..	539 106995	2	TIRE, CASTER
4..	539 106994	2	RIM, CASTER
5..	539 103300	2	ZERK
6..	539 102484	4	BEARING, FLANGE
7..	539 105307	2	ROLLER BEARING
8..	539 912234	4	AIR VALVE
9..	525 585101	4	BEARING
10..	539 112670	2	WASHER, HEAVY
11..	539 990646	2	HCS ½-13 x 1
12..	539 132689	2	HUB, WHEEL
13..	539 101173	8	NUT, LUG ½
14..	539 103527	1	MOTOR, LT
	521 911601	1	MOTOR, REVERSED, RT
15..	539 108346	8	HCS ½-13 x 2½
16..	539 101331	8	NUT ½ HEX NYLOC
17..	539 132561	4	ELBOW 45° STRAIGHT THD
18..	529 292002	1	AXLE
19..	539 110470	2	WHEEL ASSEM, REAR
20..	539 108369	4	HCS ½-13 x 1¼
21..	539 990717	4	NUT 5/16-18 HEX NYLOC
22..	539 105543	2	SPACER
23..	539 107629	2	PUSH NUT, NYLON
24..	539 107632	2	BOLT, ¼ x 7½
25..	539 107628	1	HOLD DOWN, BATTERY
26..	539 916561	4	WASHER
27..	539 106993	1	WHEEL ASSEM, CASTER

52" MOWER DECK

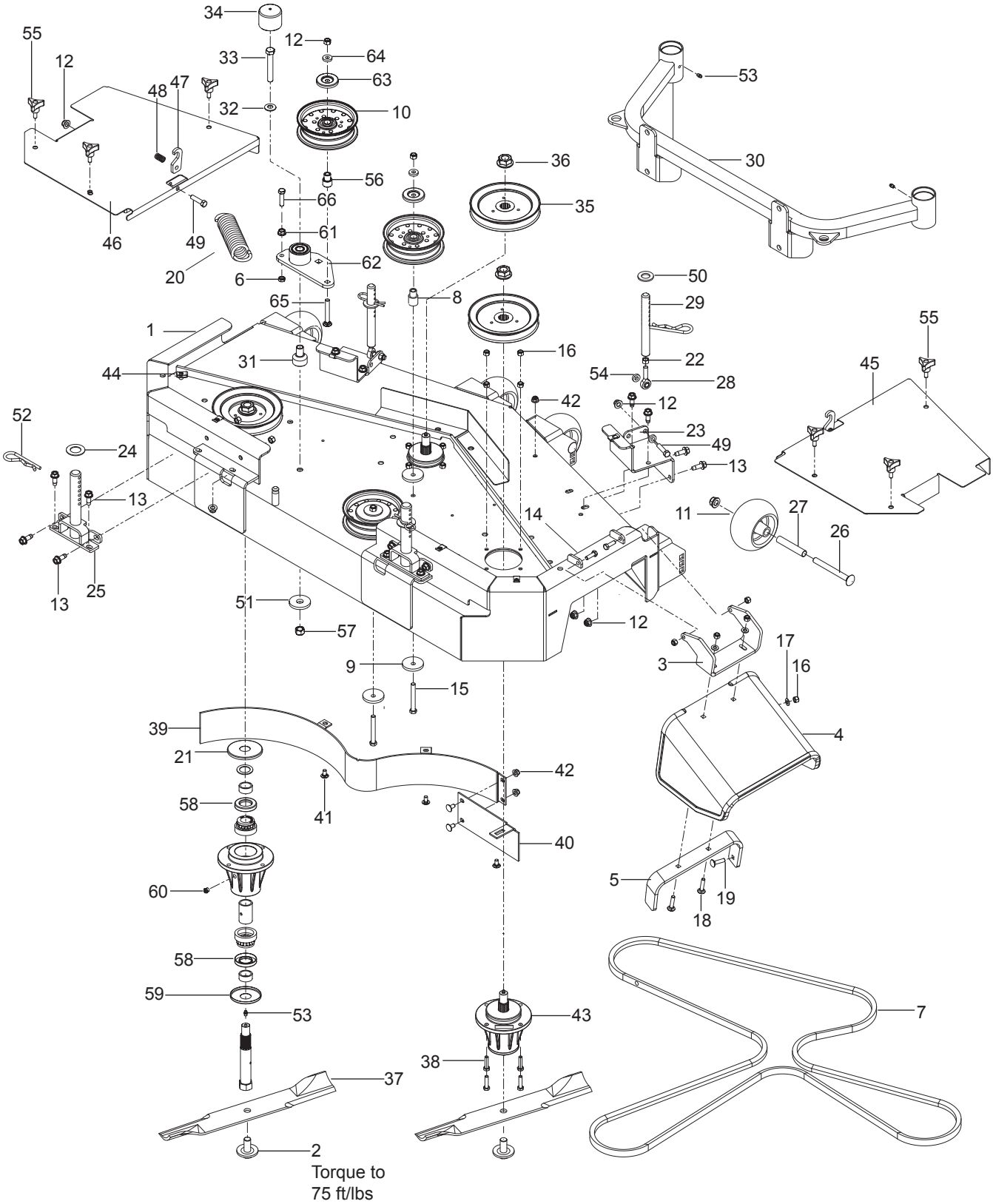

52" MOWER DECK

ITEM	PART NO.	QTY.	DESCRIPTION
1..	574 615301	1	CUTTER DECK w/DECALS
2..	539 119007	3	BLADE BOLT
3..	539 132583	1	HINGE, CHUTE
4..	539 130903	1	CHUTE, RUBBER
5..	539 130922	1	REINFORCEMENT, BRCKT
6..	539 109332	1	NUT 3/8-16 HEX JAM
7..	539 106340	1	BELT, DECK
8..	539 103295	2	BUSHING, IDLER
9..	539 106504	4	WASHER, HEAVY
10..	539 103257	3	PULLEY, IDLER
11..	574 169601	4	ROLLER, GAUGE
12..	521 996501	22	NUT 3/8-16 HEX FLG
13..	539 107476	8	BOLT 3/8-16 x 1 THD FRM
14..	539 990209	2	HCS 5/16-18 x 1
15..	539 101341	2	HCS 3/8-16 x 3
16..	539 990717	17	NUT 5/16-18 HEX NYLOC
17..	539 990188	3	WASHER 5/16 SAE FLAT
18..	539 102933	2	RHSNB 5/16-18 x 1½
19..	539 100472	1	RHSNB 5/16-18 x 1¼
20..	539 130690	1	SPRING
21..	539 108450	3	SHIELD, DUST
22..	539 990155	2	NUT 3/8-24 HEX GR 2
23..	505 339502	1	SUPPORT, FRONT, LH
	505 339602	1	SUPPORT, FRONT, RH
24..	539 113987	2	SPACER
25..	525 854001	2	PIN ASSEMBLY
26..	510 022301	4	RHSNB ½-13 x 4¾
27..	574 196401	4	TUBE, AXLE
28..	539 113739	2	ROD END, RH
29..	525 854101	2	ROD, HOC
30..	525 853802	1	SUPPORT, CASTER
31..	510 206301	1	PIVOT, BEARING
32..	539 115528	1	WASHER ½" BELLEVILLE
33..	539 103433	1	HCS ½-13 x 3¼
34..	539 114823	1	CAP, VINYL
35..	522 023801	3	PULLEY
36..	539 130653	3	NUT ¾-16 FLANGE
37..	539 100341	3	BLADE, 18"
38..	539 990627	12	HCS 5/16-18 x 1¼
39..	539 105457	1	BAFFLE, MAIN
40..	539 105453	1	BAFFLE, CENTER
41..	539 990799	5	RHSNB 5/16-18 x 5/8
42..	539 112899	5	NUT 5/16-18 HEX FLG NYLOC
43..	539 131385	3	HOUSING ASM, 72
44..	539 104763	6	RETAINER, U TYPE
45..	525 818202	1	COVER, RH
46..	525 817902	1	COVER, LH
47..	525 833002	2	HOOK
48..	539 132687	2	SPRING, COMPRESSION
49..	539 990655	4	HCS 3/8-16 x 1½
50..	539 109333	2	WASHER ¾ FLAT SAE
51..	539 102243	1	WASHER, SUPPORT
52..	525 305801	4	HAIR PIN COTTER
53..	539 101474	5	ZERK
54..	539 109562	2	WASHER 3/8 x ¾
55..	539 104411	6	KNOB
56..	539 130242	1	BUSHING, IDLER
57..	539 101331	1	NUT ½ HEX NYLOC
58..	539 108754	6	SHAFT SEAL
59..	539 108449	3	DUST CAP, BOTTOM
60..	539 977326	3	POPPET, GREASE
61..	539 990613	1	NUT 3/8-16 HEX WHIZLK
62..	539 130391	1	ARM, IDLER w/ BEARINGS
63..	510 254501	3	SHIELD, DUST
64..	522 023401	3	WASHER 3/8 THICK
65..	539 130235	1	RHSNB 3/8-16 x 2¾
66..	539 107042	1	HCS 3/8-16 x 1½ GR 8

61" MOWER DECK

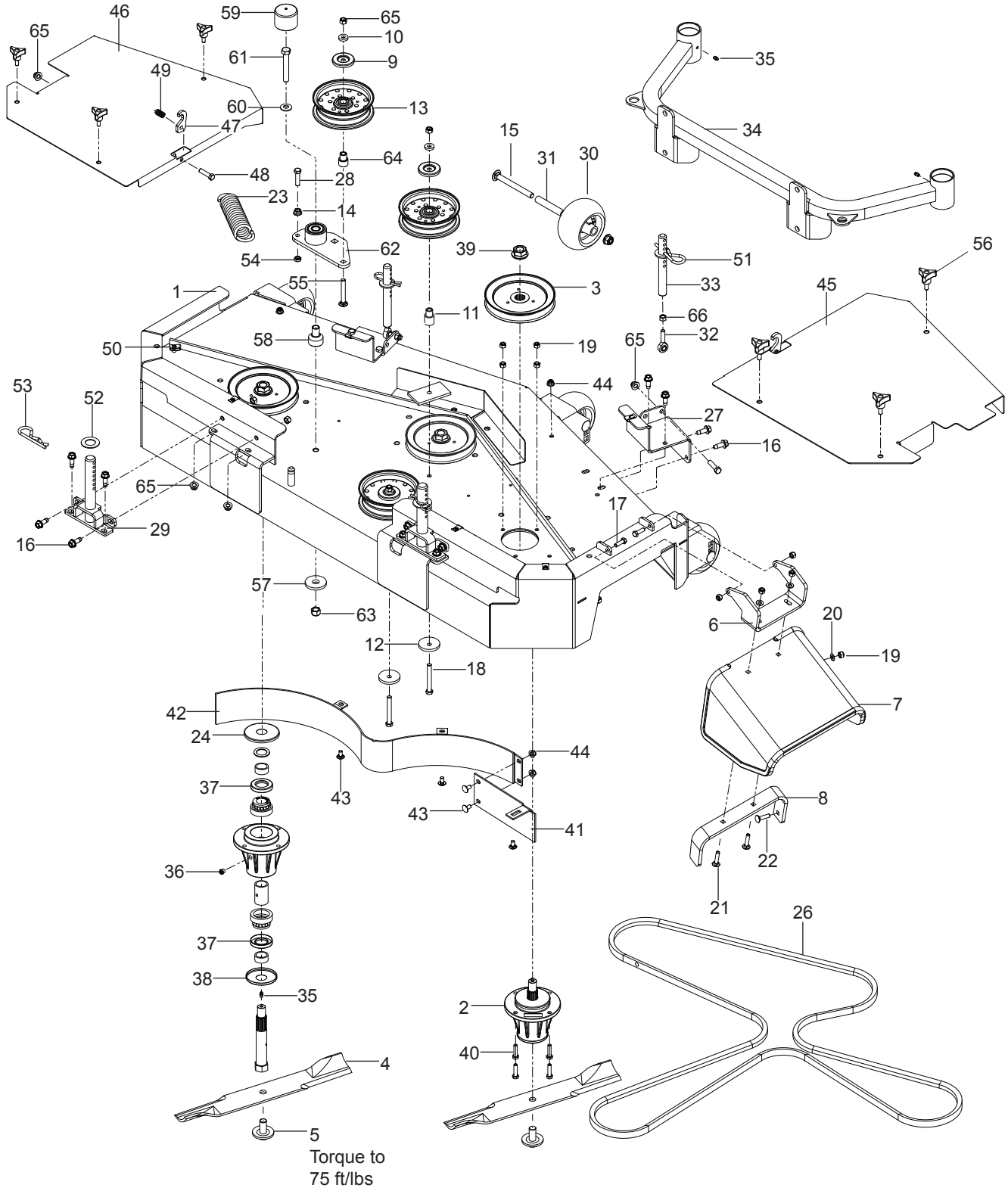

61" MOWER DECK

ITEM	PART NO.	QTY.	DESCRIPTION
1..	574 615401	1	CUTTER DECK w/DECALS
2..	539 131385	3	HOUSING ASM
3..	522 023901	3	PULLEY
4..	539 101733	3	BLADE, 21"
5..	539 119007	3	BLADE BOLT
6..	539 132583	1	HINGE, CHUTE
7..	539 130903	1	CHUTE, RUBBER
8..	539 130922	1	REINFORCEMENT, BRCKT
9..	510 254501	3	SHIELD, DUST
10..	522 023401	3	WASHER 3/8 THICK
11..	539 103295	2	BUSHING, IDLER
12..	539 106504	4	WASHER, HEAVY
13..	539 103257	3	PULLEY, IDLER
14..	539 990613	1	NUT 3/8-16 HEX WHIZLK
15..	510 022301	4	RHSNB ½-13 x 4¾
16..	539 107476	14	BOLT 3/8-16 x 1 THD FRM
17..	539 990209	2	HCS 5/16-18 x 1
18..	539 101341	2	HCS 3/8-16 x 3
19..	539 990717	17	NUT 5/16-18 HEX NYLOC
20..	539 990188	3	WASHER 5/16 SAE FLAT
21..	539 102933	2	RHSNB 5/16-18 x 1½
22..	539 100472	1	RHSNB 5/16-18 x 1¼
23..	539 130690	1	SPRING
24..	539 108450	3	DUST CAP, TOP
25..	539 111897	1	WASHER 3/8 SPECIAL
26..	522 811401	1	BELT, DECK
27..	505 339602	1	SUPPORT, FRONT, RH
	505 339502	1	SUPPORT, FRONT, LH
28..	539 107042	1	HCS 3/8-16 x 1½ GR 8
29..	525 854001	2	PIN ASSEMBLY
30..	574 169601	4	ROLLER, GAUGE
31..	574 196401	4	TUBE, AXLE
32..	539 113739	2	ROD END, RH
33..	525 854101	2	ROD, HOC
34..	525 853902	1	SUPPORT, CASTER
35..	539 101474	5	ZERK
36..	539 977326	3	POPPET, GREASE
37..	539 108754	6	SHAFT SEAL
38..	539 108449	3	DUST CAP, BOTTOM
39..	539 130653	3	NUT ¾-16 FLANGE
40..	539 990627	12	HCS 5/16-18 x 1¼
41..	539 105461	1	BAFFLE, CENTER
42..	523 024902	1	BAFFLE, MAIN
43..	539 990799	5	RHSNB 5/16-18 x 5/8
44..	539 112899	5	NUT 5/16-18 HEX FLG NYLOC
45..	525 818602	1	COVER, RH
46..	525 818502	1	COVER, LH
47..	525 833002	2	HOOK
48..	539 990655	4	HCS 3/8-16 x 1½
49..	539 132687	2	SPRING, COMPRESSION
50..	539 104763	6	RETAINER, U TYPE
51..	539 109333	2	WASHER ¾ FLAT SAE
52..	539 113987	2	SPACER
53..	525 305801	4	HAIR PIN COTTER
54..	539 109332	1	NUT 3/8-16 HEX JAM
55..	539 130235	1	RHSNB 3/8-16 x 2¾
56..	539 104411	6	KNOB
57..	539 102243	1	WASHER, SUPPORT
58..	510 206301	1	PIVOT, BEARING
59..	539 114823	1	CAP, VINYL
60..	539 115528	1	WASHER ½" BELLEVILLE
61..	539 103433	1	HCS ½-13 x 3¼
62..	539 130391	1	ARM, IDLER w/ BEARINGS
63..	539 101331	1	NUT ½ HEX NYLOC
64..	539 130242	1	BUSHING, IDLER
65..	521 996501	23	NUT 3/8-16 HEX FLG
66..	539 990155	2	NUT 3/8-24 HEX GR 2

DECALS

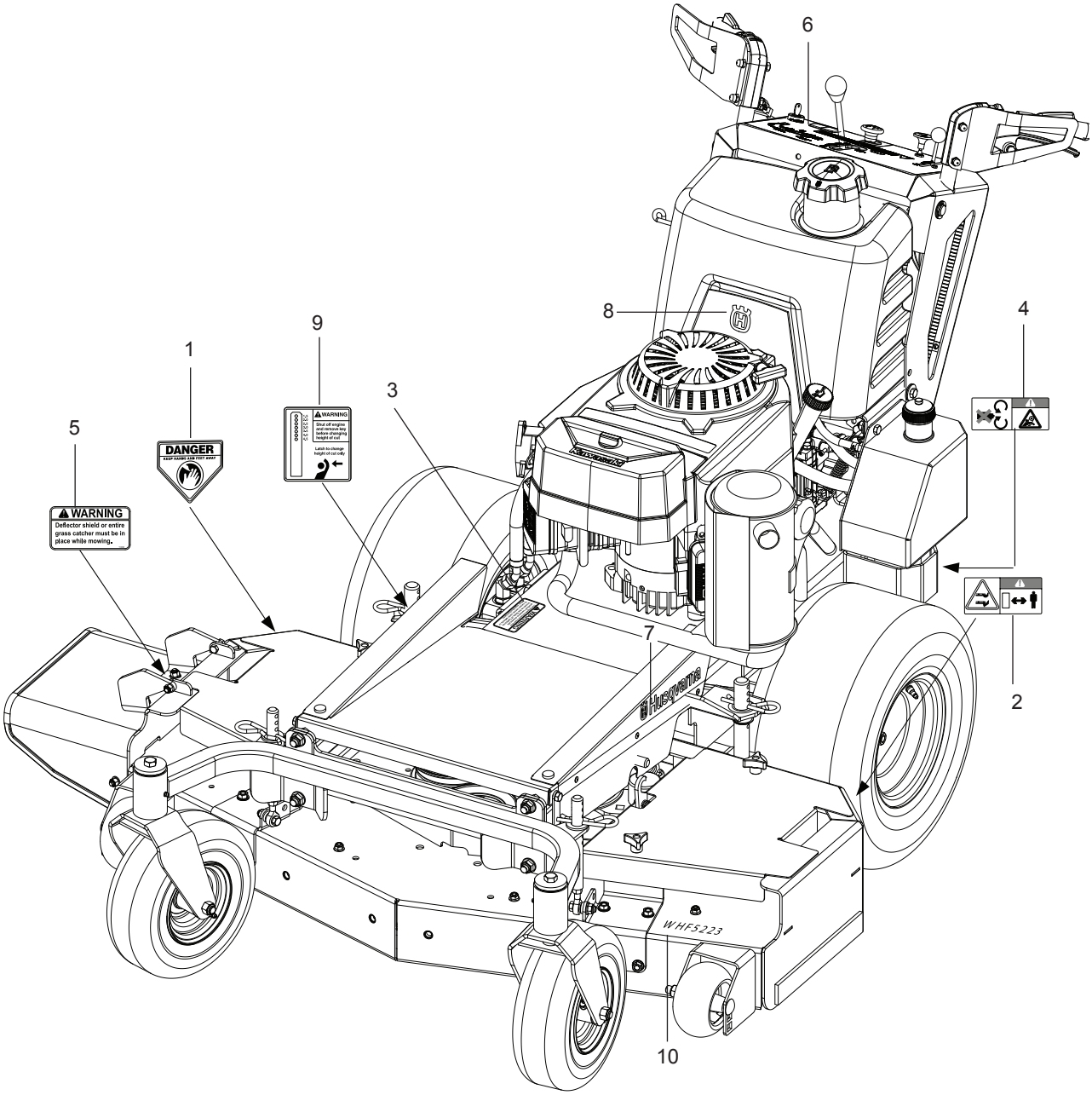
6
8
4
9
1
3
5
DANGER
KEEP HANDS AND FEET AWAY
WARNING
Shut off engine and remove key before changing height of cut
Latch to change height of cut only
WARNING
Deflector shield or entire grass catcher must be in place while mowing.
7
2
Husqvarna
WHF5223
10

DECALS

ITEM	PART NO.	QTY.	DESCRIPTION
1..	539 913010	1	DECAL, WARNING
2..	539 105746	1	DECAL, SEVERING
3..	539 101881	1	DECAL, PROP 65
4..	539 105744	1	DECAL, BELT DRIVES
5..	539 113224	1	DECAL, WARNING
6..	520 282601	1	DECAL, INSTRUMENT PNL
7..	532 422012	2	DECAL, HUSQVARNA
8..	532 422011	1	DECAL, CROWN
9..	574 040001	1	DECAL, HEIGHT OF CUT
10..	520 282401	1	DECAL, WHF5223
	520 282501	1	DECAL, WHF6223